July 22, 2014

CEDAR RAPIDS METRO DESIGN STANDARDS CHAPTER 5 – ROADWAY DESIGN

Supplemental to SUDAS Chapter 10

Chapter 10 – Street Tree Criteria

This section replaces Chapter 10A General Information and Chapter 10B Street Tree Design

CHAPTER 10A-1 GENERAL INFORMATION

A. Concept

A street tree is any tree with a trunk located 50% or more within the land lying between property lines on either side of all public streets, boulevards, and alleys, including public easements. With narrower rights-of-way and the increasing use of underground utilities, the available space within a public right-of-way to plant trees is diminishing. While there are advantages to having privately owned and maintained street trees, that is not always possible, and the primary disadvantage is the City loses control over the maintenance and care for those trees.

If trees are placed in the public right-of-way, the principal considerations in design of the placement of street trees are their relation to horizontal and vertical clear zones. No street tree should be placed in the horizontal clear zone or triangular sight distance as described in Chapter 5. The minimum vertical clearance for mature trees should be 16 feet above the street grade, 10 feet above recreational trails, and 8 feet above sidewalks. Special considerations must be given to clearances to overhead utility lines, driveways, traffic signs, and underground utilities. If at all possible, street trees should not be placed over buried utilities (public or private).

B. Conditions

1. **Design Standards:**

   a. SUDAS Design Manual

   b. Recognized design publications for street trees

   c. In case of a conflict between the above design standards, the Jurisdictional Engineer should be contacted for clarification

2. **Construction Standards:** Use the most recent edition of the SUDAS Standard Specifications together with the latest contract supplementary information.

3. **Project Submittals:** If street trees are included in the project, a street tree planting layout showing the quantity, species/cultivar, and location of all trees must be submitted for review. This plan is to be approved by the Jurisdiction prior to the tree planting. If Iowa DOT has jurisdiction over the right-of-way, additional permitting may be necessary. The designer shall work with all concerned jurisdictions to obtain the necessary approvals and clearances.

4. **Ownership:** If the tree is located in the public right-of-way or publicly owned property, Section 364.12 of the Iowa Code requires the Jurisdiction to remove deadwood or diseased trees. If the street tree(s) are located outside of public property or right-of-way, the responsibility and ownership is that of the landowner.

5. **Establishment and Warranty Periods:** The establishment period is 1 year after the installation has been accepted by the Engineer. Care and maintenance of all plants will be the responsibility of the Contractor during that time. The Engineer has the option to include an additional year, which is called the warranty period. If specified, the warranty period begins immediately after the establishment period and continues for another year. Check with the Jurisdiction for their requirements.

CHAPTER 10B-1 STREET TREE DESIGN

A. Area Requirement per Tree

At least 25 square feet of open ground at finish grade level is required for each tree and the trunk of street trees should be no closer than 2.5 feet from impervious surface material. Planting pits shall be a minimum of 300-400 cubic feet (10' x 10' x 3'-4' deep) of quality top soil. After planting, the minimum opening of 25 square feet shall be covered with a pervious surface (such as mulch). Refer to the following detail.

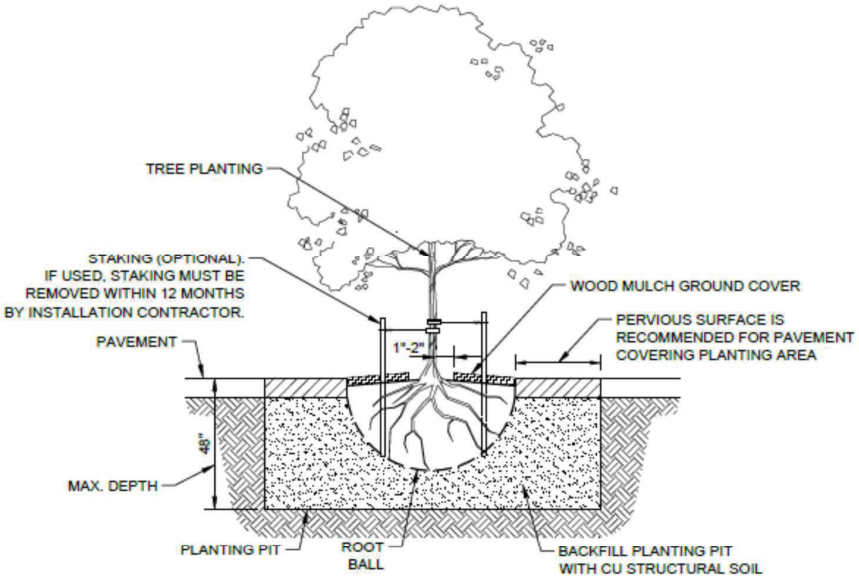

SECTION A-A

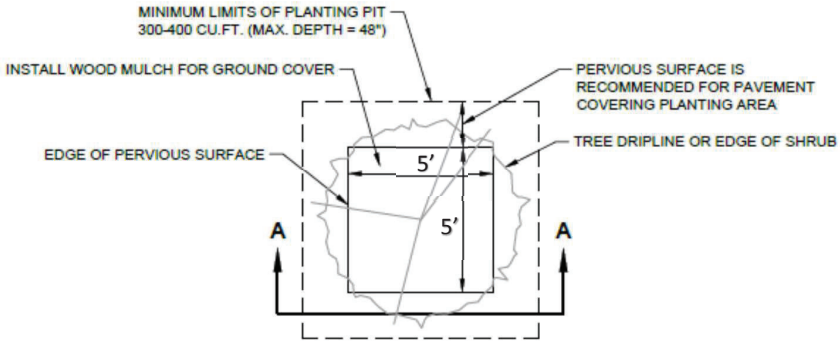

PLAN VIEW

B. Spacing

For planning purposes, the ideal spacing should be 40 feet apart or no closer than the distance of their full spread from the next tree in the parking. Spacing as close as 30 feet may be allowed by the Jurisdiction for species/cultivars or ornamental trees that have appropriate mature branch spreads.

C. Location within Public Right-of-way

The following criteria are for the location of street trees that are located in the street right-of-way. Jurisdictions may require additional street right-of-way to provide clearances to underground or overhead utilities. The mature tree trunk size should be taken into account when placing the tree. The criterion does not include street trees located within medians. Special designs that meet the required clear zone must be used when locating trees within medians.

1. Minimum distance of 10 linear feet from water service stop boxes.
2. Minimum distance from the edge of the traveled way according to Chapter 5 - Roadway Design.
3. Minimum distance of 10 linear feet from hydrants, poles, transformers, telephone junction boxes, manholes, and driveway approaches.
4. Minimum distance from street lights of 25 linear feet or the width of spread of the mature tree, whichever is greater.
5. In central business districts where traffic speeds are low, a minimum distance of 3 feet from the back of curb should be used for street trees if a minimum distance of 8 feet exists for right-of-way from the back of curb.
6. No trees should be in the triangular sight distance area. (See Chapter 5 - Roadway Design).

D. Tree Size

Street trees should be Street trees shall be 2” minimum diameter at breast height (DBH). Ornamental trees shall be 1.5” DBH. DBH is defined as diameter at breast height or 4.5 feet above grade.

All underground utilities or any other improvements, either private or public, will be located before excavation is done. Information concerning contacting Iowa One Call will be included in the contract documents. The Iowa One Call phone number is 811 or 800-292-8989.

E. Selection of Trees

Please see the City of Cedar Rapids approved tree list for trees allowed on the parkway (Check with the City Forester for the latest list).

F. Trees that Should Not be Planted in Public Right-of-way

Please see the Cedar Rapids prohibited trees list for trees that are not allowed on the City ROW (available from the City Forester).

G. Guideline for Selection of Nursery Trees

(Copyright 2012 James R. Urban, FASLA 02931-8 September 20, 2012 Tree Planting)

A. Standards and measurement: Provide plants of quantity, size, genus, species, and variety or cultivars as shown and scheduled in contract documents.
   1. All plants shall conform to ANSI Z60.1 "American Standard for Nursery Stock", unless modified by provisions in this specification. In the event that there is a conflict between this specification and ANSI Z60.1, this specification section shall be considered correct.
   2. General: Provide healthy, vigorous stock, grown in a recognized nursery and reasonably free of disease, insects, eggs, bores, and larvae. At the time of planting all plants shall have root system, stem, and branch form that will not restrict normal growth, stability and vigor for the expected life of the plant.
   3. Plant quality above the soil line:
      a. Plants shall be of exceptional quality with the color, shape, size and distribution of trunk, stems, branches, buds and leaves normal to the plant type specified.
      b. Trees shall not have co dominant leaders or significant branch unions with included bark between stems. All trees are assumed to be single leader plants unless a different form is specified in the plant list or drawings.
      c. Tree trunks shall be reasonably straight with lateral limbs reasonably symmetrical and evenly distributed along the trunk.
      d. The trunk and branches shall be reasonably free of knots, scrapes, broken or split wood, fresh limb cuts, sunscald, injuries, and abrasions. All graft unions, where applicable, shall be completely healed without visible sign of graft rejection. All grafts shall be visible above the soil line.

B. Plant quality at or below the soil line:
   1. The roots shall be reasonably free of scrapes, broken or split wood.
   2. A minimum of three structural roots reasonably distributed around the trunk shall be found in each plant.
   3. Plants with structural roots on only one side of the trunk (J roots) shall be rejected.
   4. The root crown must not be more than 2 inches below the soil line. The top two structural roots shall be no more than 3 inches below the soil line and the rest of the structural roots shall be no more than 5 inches below the soil line when measured 4 inches radial to the trunk. The grower may request a modification to this requirement for species with roots that rapidly descend, provided that the grower removes all circling roots above the structural roots across the top of the root ball.
   5. The root system shall be reasonably free of stem girdling roots above the root collar, vertical roots and or kinked roots from nursery production practices. Stem girdling roots, vertical and kinked roots include roots on the interior of the root ball.
   6. The final plant grower shall be responsible to have determined that the plants have been root pruned at each step in the plant production process to remove stem girdling roots and kinked roots, or that the previous production system use Root Safe Containers or practices that produce a root system throughout the root ball that meets these specifications. Regardless of the work of previous growers, the plant's root system shall be modified at the final production stage to produce the require plant root quality. The final grower shall certify in writing that all plants are reasonably free of stem girdling and kinked roots as defined in this specification, and that the tree has been grown and harvested to produce a plant that meets these specifications.

A. Ensure trees are rooted into the root ball so that soil or media remains intact and trunk and root ball move as one when lifted. The trunk should bend when gently pushed, not pivot at or below soil line.
B. The tree canopy should be symmetrical, free of large voids, and typical of the species or cultivar. Live crown ratio (distance from bottom of canopy to tree top/tree height) should be at least 60%.

C. Branches should be less than 2/3 the trunk diameter, free of bark inclusions, and more-or-less radially distributed around the trunk.
D. Trees greater than 1 1/2 inches caliper should be able to stand erect without a supporting stake.
E. If any of the above conditions are not met, trees may be rejected.

H. Staking of Trees

Depending on the size of the trees identified to be planted, the Jurisdictional Engineer should designate if staking is required. Generally if plant stock is delivered with well-developed root balls, and if properly planted, it will not require staking.

I. Planting Season

Planting shall only be performed when weather and soil conditions are suitable for planting the materials specified in accordance with locally accepted practice. Install plants during the planting time as described in the city contract unless otherwise approved in writing by the City. In the event that the contractor requests planting outside the dates of the planting season, approval of the request does not change the requirements of the warranty.