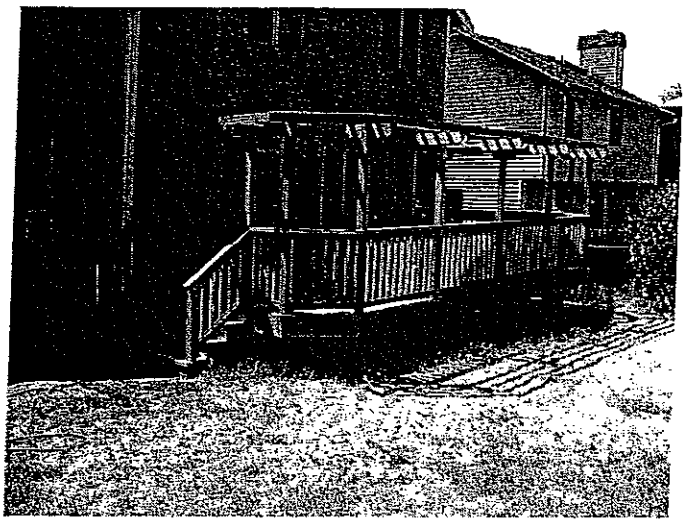

RESIDENTIAL DECKS

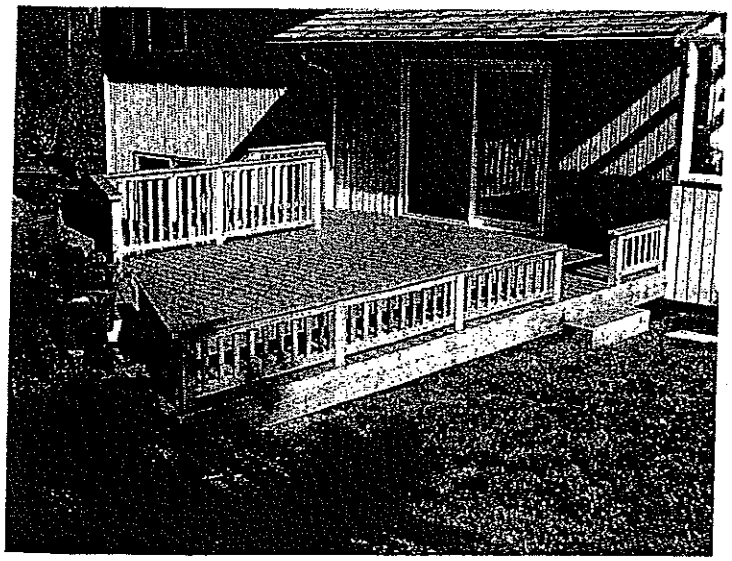

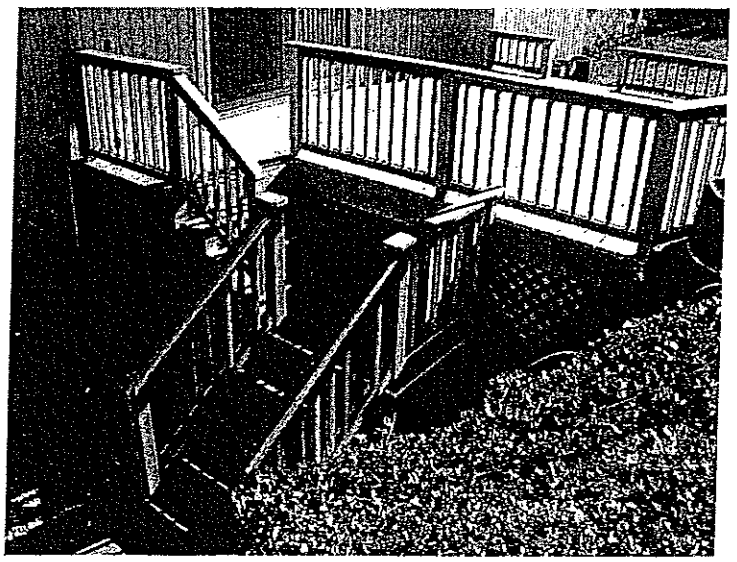

Deck Section Drawings: 3 Typical Footing, Post and Beam Details

All lumber shall be approved pressure treated to .40 retention for resistance to decay. .60 retention in ground.
All fasteners shall be corrosion resistant.

Double Box Joist as Beam

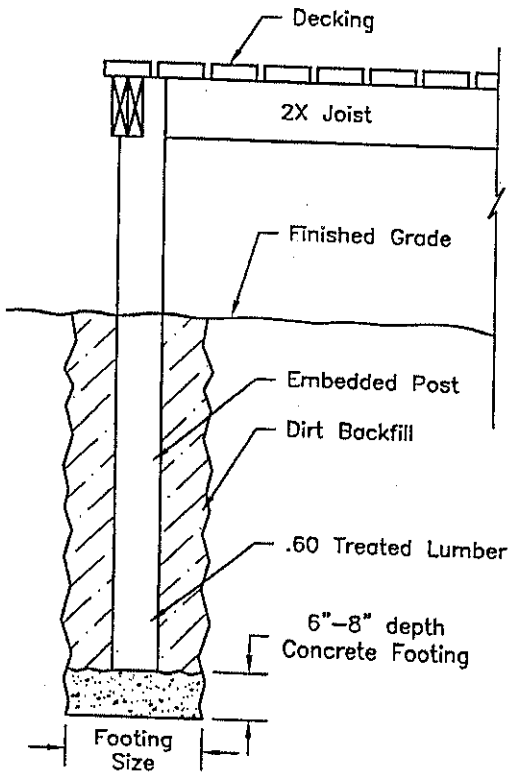

Beam Bolted to Post, 2' Cantilever

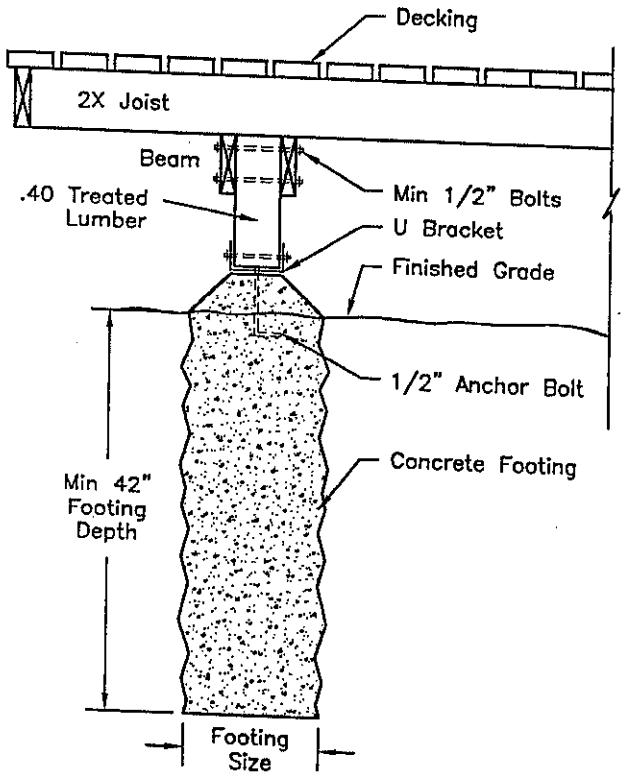

Post Notched to Support Beam

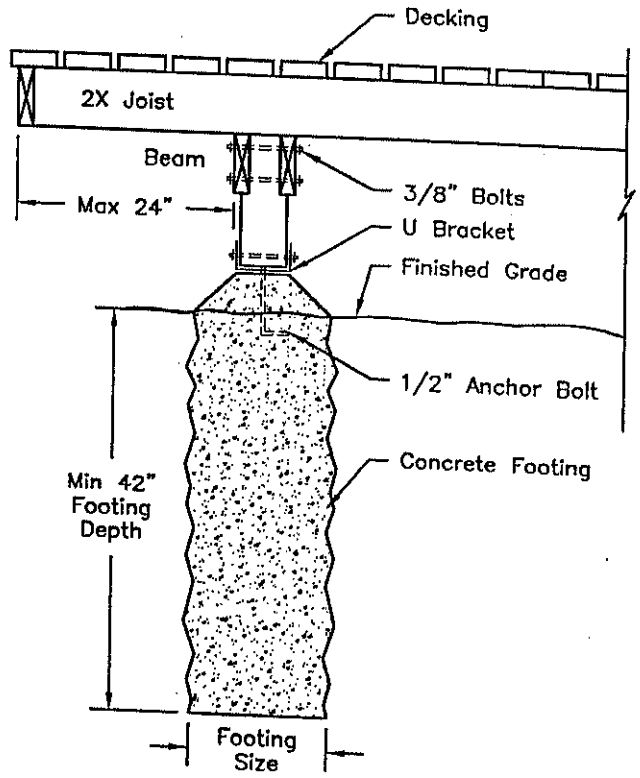

JOIST SPAN

Based no No. 2 or better treated lumber

(Design Load = 40# LL + 10 # DL, Deflection =L/360)

	12" OC	16" OC	24" OC
2 X 6	10'-9"	9'-9"	8'-6"
2 X 8	14'-2"	12'-10"	11'-0"
2 X 10	18'-0"	16'-1"	13'-5"
2 X 12	21'-9"	19'-0"	15'-4"

TABLE FOR ROOF LOAD FTG SIZE INCREASES

(See Chart at Right)

Original Footing Size	Size Increased 55%	Size Increased 90%
5	6	7
6	7	8
7	9	10
8	10	11
9	11	12
10	12	14
11	14	15
12	15	16
13	16	18
14	17	19
15	19	21
16	20	22
17	21	23
18	22	25
19	23	26
20	25	28
21	26	29

Footnotes to Beam & Footing Size Chart

1. Joist length is total length of joist, including any cantilevers.
2. When the joist extends (cantilevers) beyond support beam by 18" or more, add 1" to footing dimensions shown.
3. Requirements for future porches or screen porches
   a. Increase corner footing size shown by 90%
   b. Increase center footing size shown by 55%
   c. Locate all footings at extremities of deck (no cantilevers).
   d. Beam sizes indicated need not be altered.

OPEN DECK BEAM & FOOTING SIZES - BASED ON #2 OR BETTER SOUTHERN PINE

Read Post Spacing This Side

Read Joist Length This Side

		4'	5'	6'	7'	8'	9'	10'	11'	12'	13'	14'
6'	Southern Pine Beam	1-2x6	1-2x6	1-2x6	2-2x6	2-2x6	2-2x6	2-2x8	2-2x8	2-2x10	2-2x10	2-2x10
	Corner Footing	5	6	6	7	7	7	8	8	9	9	9
	Intermediate Footing	8	8	9	9	10	10	11	12	12	13	13
7'	Southern Pine Beam	1-2x6	1-2x6	1-2x6	2-2x6	2-2x6	2-2x8	2-2x8	2-2x10	2-2x10	2-2x10	2-2x12
	Corner Footing	5	6	7	7	8	8	8	9	9	10	10
	Intermediate Footing	8	8	9	10	11	11	12	13	13	14	14
8'	Southern Pine Beam	1-2x6	1-2x6	2-2x6	2-2x6	2-2x8	2-2x8	2-2x8	2-2x10	2-2x10	2-2x12	2-2x12
	Corner Footing	6	6	7	8	8	8	9	9	10	10	11
	Intermediate Footing	8	9	10	11	11	12	13	13	14	15	15
9'	Southern Pine Beam	1-2x6	1-2x6	2-2x6	2-2x6	2-2x8	2-2x8	2-2x10	2-2x10	2-2x12	2-2x12	3-2x10
	Corner Footing	6	7	7	8	9	9	10	10	10	11	11
	Intermediate Footing	9	10	10	11	12	13	14	14	15	15	16
10'	Southern Pine Beam	1-2x6	1-2x6	2-2x6	2-2x6	2-2x8	2-2x8	2-2x10	2-2x12	2-2x12	3-2x10	3-2x10
	Corner Footing	6	7	8	8	9	10	10	11	11	12	12
	Intermediate Footing	9	10	11	12	13	14	14	15	16	16	17
11'	Southern Pine Beam	1-2x6	2-2x6	2-2x6	2-2x8	2-2x8	2-2x10	2-2x10	2-2x12	2-2x12	3-2x10	3-2x12
	Corner Footing	7	7	8	9	9	10	11	11	12	12	13
	Intermediate Footing	9	11	12	12	13	14	14	15	16	16	17
12'	Southern Pine Beam	1-2x6	2-2x6	2-2x6	2-2x8	2-2x8	2-2x10	2-2x10	2-2x12	3-2x10	3-2x10	3-2x12
	Corner Footing	7	8	9	9	10	10	11	12	12	13	13
	Intermediate Footing	10	11	12	13	14	15	16	16	17	18	18
13'	Southern Pine Beam	1-2x6	2-2x6	2-2x6	2-2x8	2-2x8	2-2x10	2-2x10	2-2x12	3-2x10	3-2x12	3-2x12
	Corner Footing	7	8	9	10	10	11	12	12	13	13	14
	Intermediate Footing	10	12	13	14	15	15	16	17	18	19	19
14'	Southern Pine Beam	1-2x6	2-2x6	2-2x6	2-2x8	2-2x10	2-2x10	2-2x12	3-2x10	3-2x12	3-2x12	3-2x12
	Corner Footing	8	8	9	10	11	11	12	13	13	14	14
	Intermediate Footing	11	12	13	14	15	16	17	18	18	19	20
15'	Southern Pine Beam	2-2x6	2-2x6	2-2x8	2-2x8	2-2x10	2-2x12	2-2x12	3-2x10	3-2x12	3-2x12	Eng Bm
	Corner Footing	8	9	10	10	11	12	12	13	14	14	15
	Intermediate Footing	11	12	14	15	16	17	17	18	19	20	21
16'	Southern Pine Beam	2-2x6	2-2x6	2-2x8	2-2x8	2-2x10	2-2x12	2-2x12	3-2x10	3-2x12	3-2x12	Eng Bm
	Corner Footing	8	9	10	11	11	12	13	13	14	15	15
	Intermediate Footing	11	13	14	15	16	17	18	19	20	21	21

One and Two Family Dwellings

Guards Required:

* Porches, decks, or raised floor surfaces located more than 30-inches above the floor or grade below shall have guards not less than 36-inches in height.

* Required guards shall have intermediate rails or ornamental closures that do not allow passage of a sphere 4-inches in diameter.

* The triangular openings formed by the riser, tread, and bottom rail of a guard at the open side of a stairway are permitted to be of such a size that a sphere 6-inches in diameter cannot pass through.

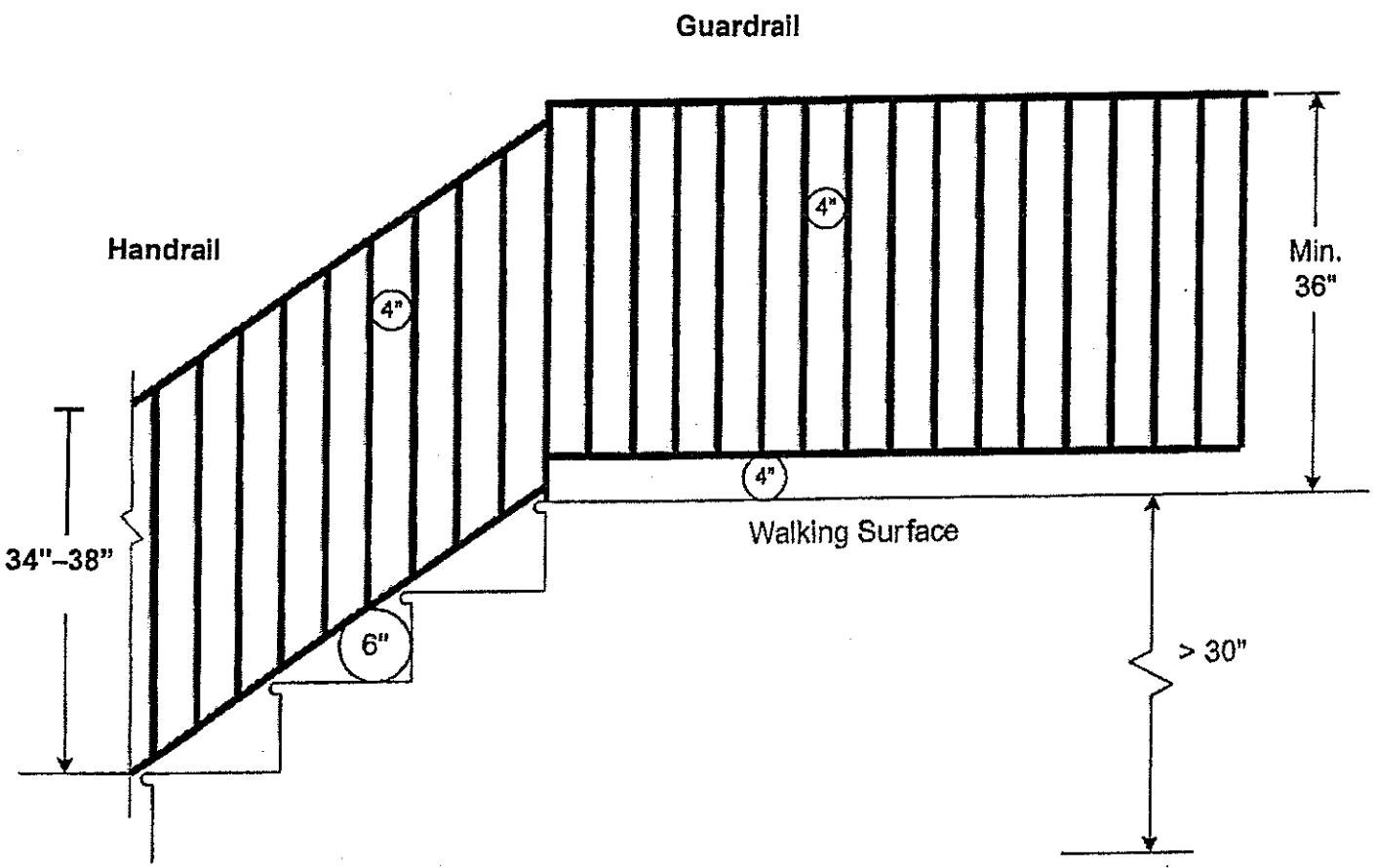

Handrails – 34" min – 38" max

Guardrails – 36" min

HANDRAIL SHAPES

Approved Handrail Shapes

Other shapes may be acceptable if they provide equivalent graspability

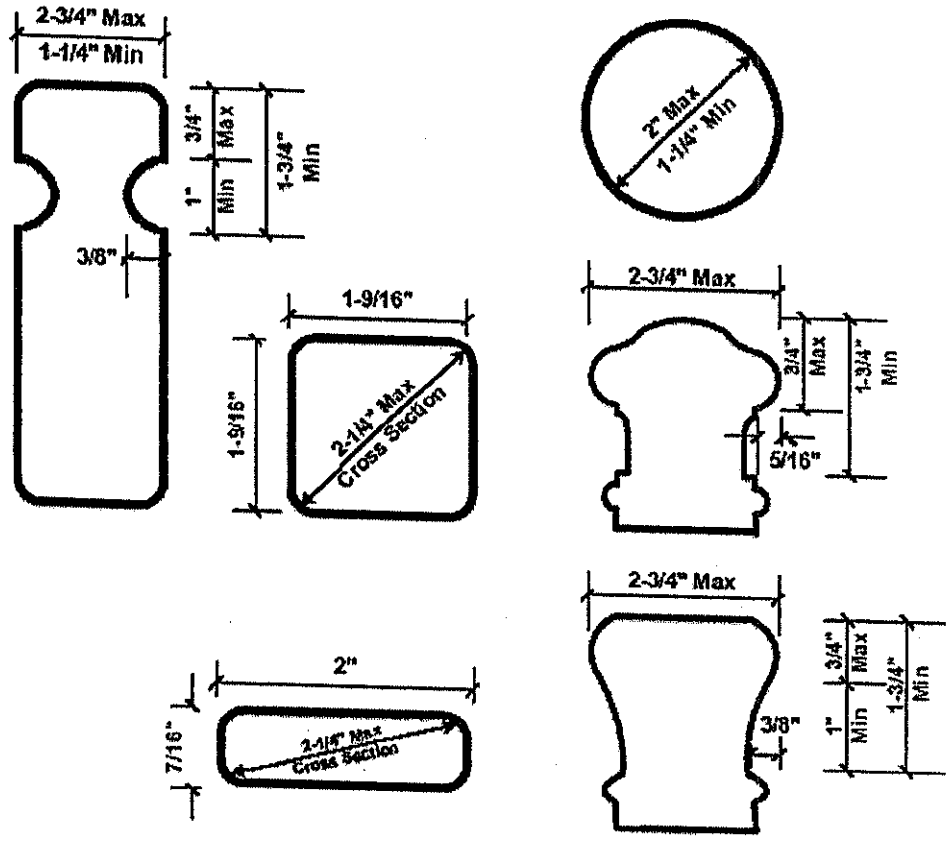

Clearance: 1-1/2" minimum between the handrail & wall

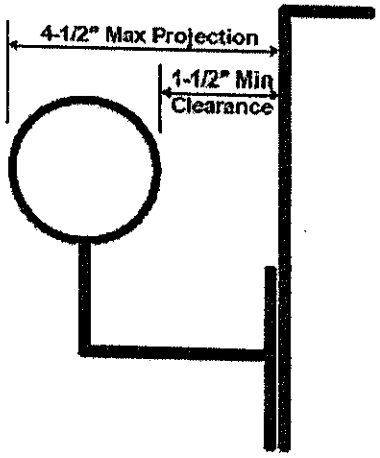

Finished step with one riser at deck for total of 6 risers.

Risers will be equal in size to within 3/8".

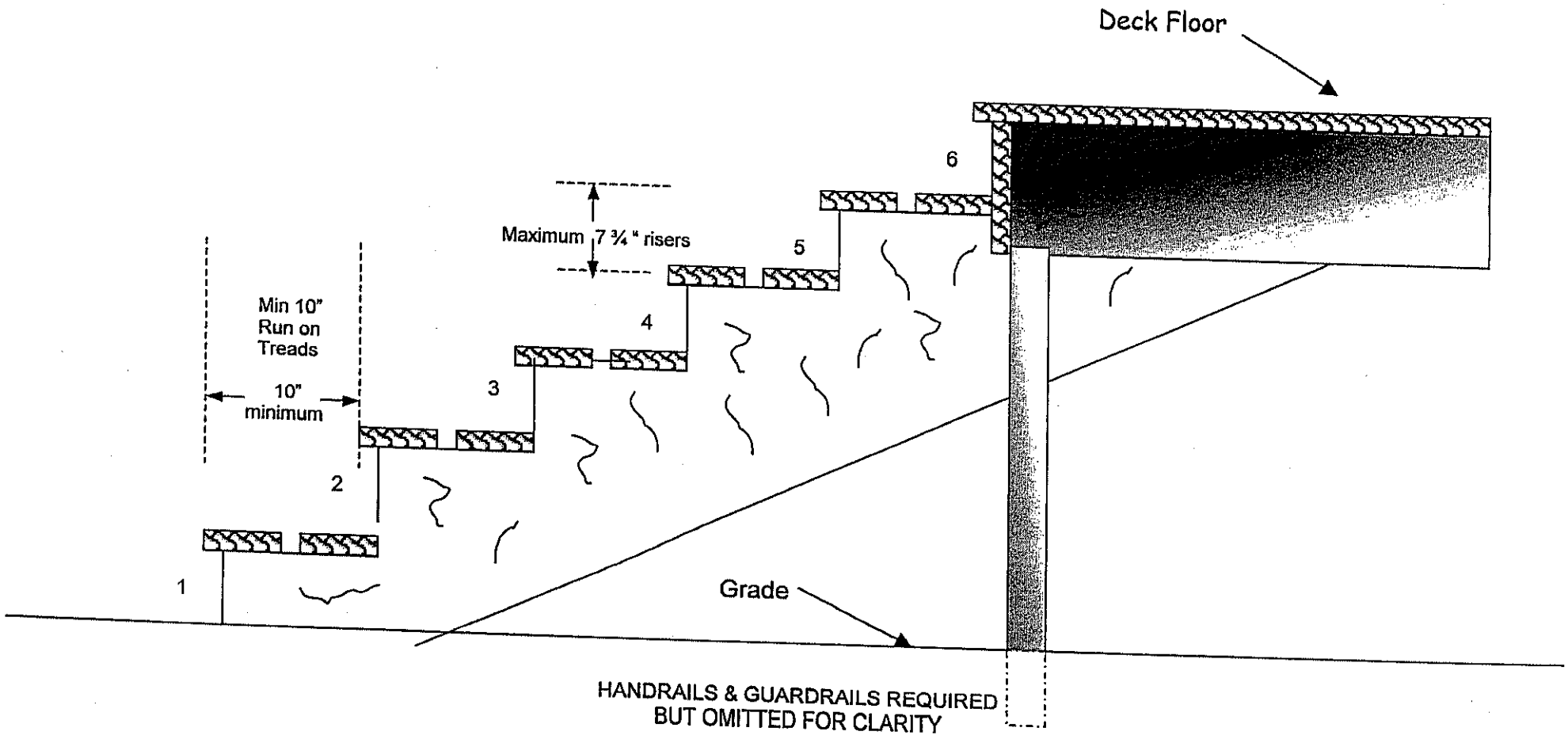

DETERMINING RISERS

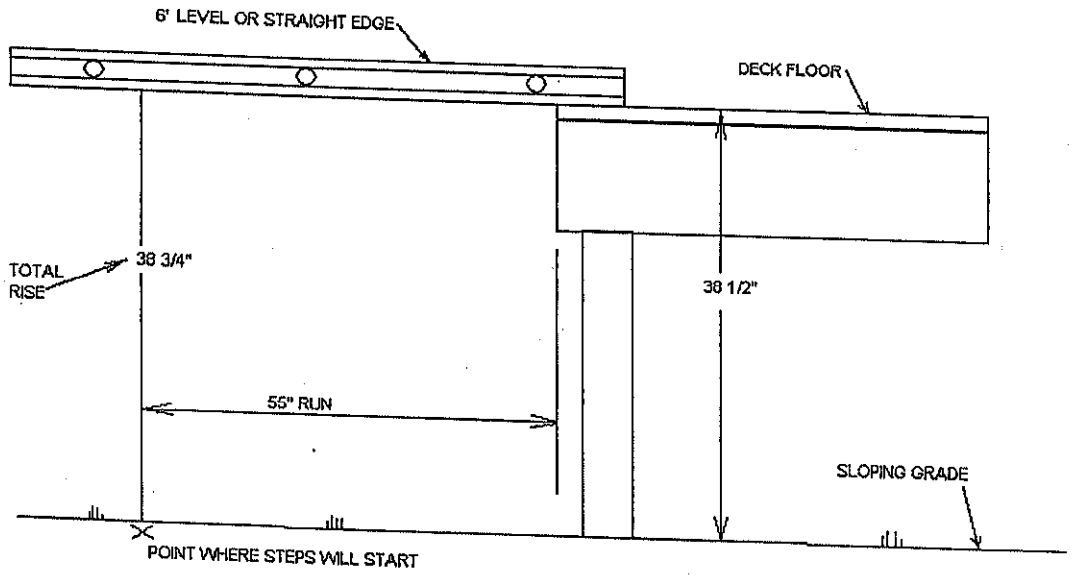

NOTE: There is always one less run total than required risers.

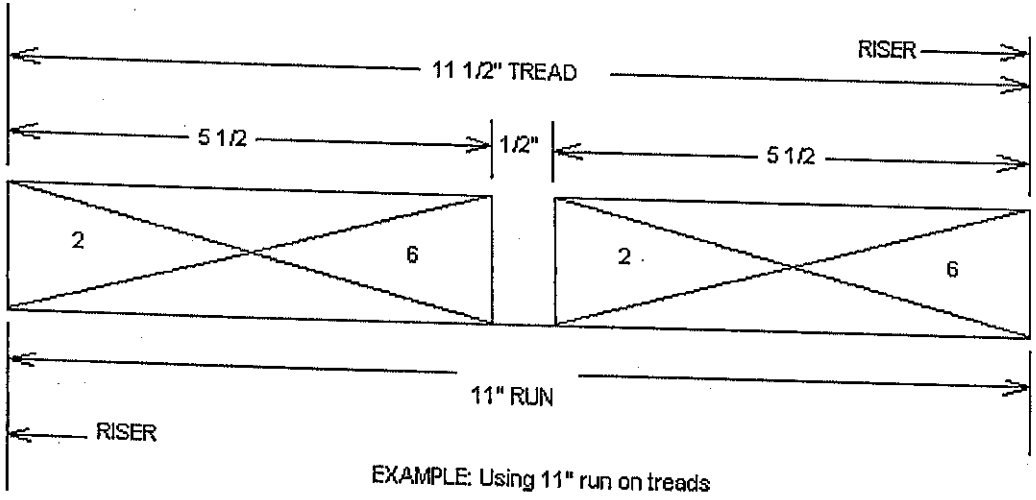

EXAMPLE: Using 11" run on treads

Maximum riser is 7-3/4" & minimum tread depth is 10". The greatest riser height & tread shall not exceed the smallest by more than 3/8"

Determine total rise at point where steps will start NOT at deck. 38-3/4" would work just right for residential steps where 7-3/4" is maximum riser. 38-3/4" divided by 7-3/4" = 5 risers. Commercial steps cannot exceed 7" in rise, therefore, 38-3/4" will require 6 risers. 38-3/4" divided by 6 = 6.46" or approximately 6-7/16" per riser.
(See table below)

Know what you want to use for tread material & determine your run. Remember that residential run is 10" minimum.
Commercial run is 11" minimum.

TABLE
Change Decimals to Fractions

.06" = 1/16"	.56" = 9/16"
.13" = 1/8"	.63" = 5/8"
.19" = 3/16"	.69" = 11/15"
.25" = 1/4"	.75" = 3/4"
.31" = 5/16"	.81" = 13/16"
.38" = 3/8"	.88" = 7/8"
.44" = 7/16"	.94" = 15/16"
.50" = 1/2"	
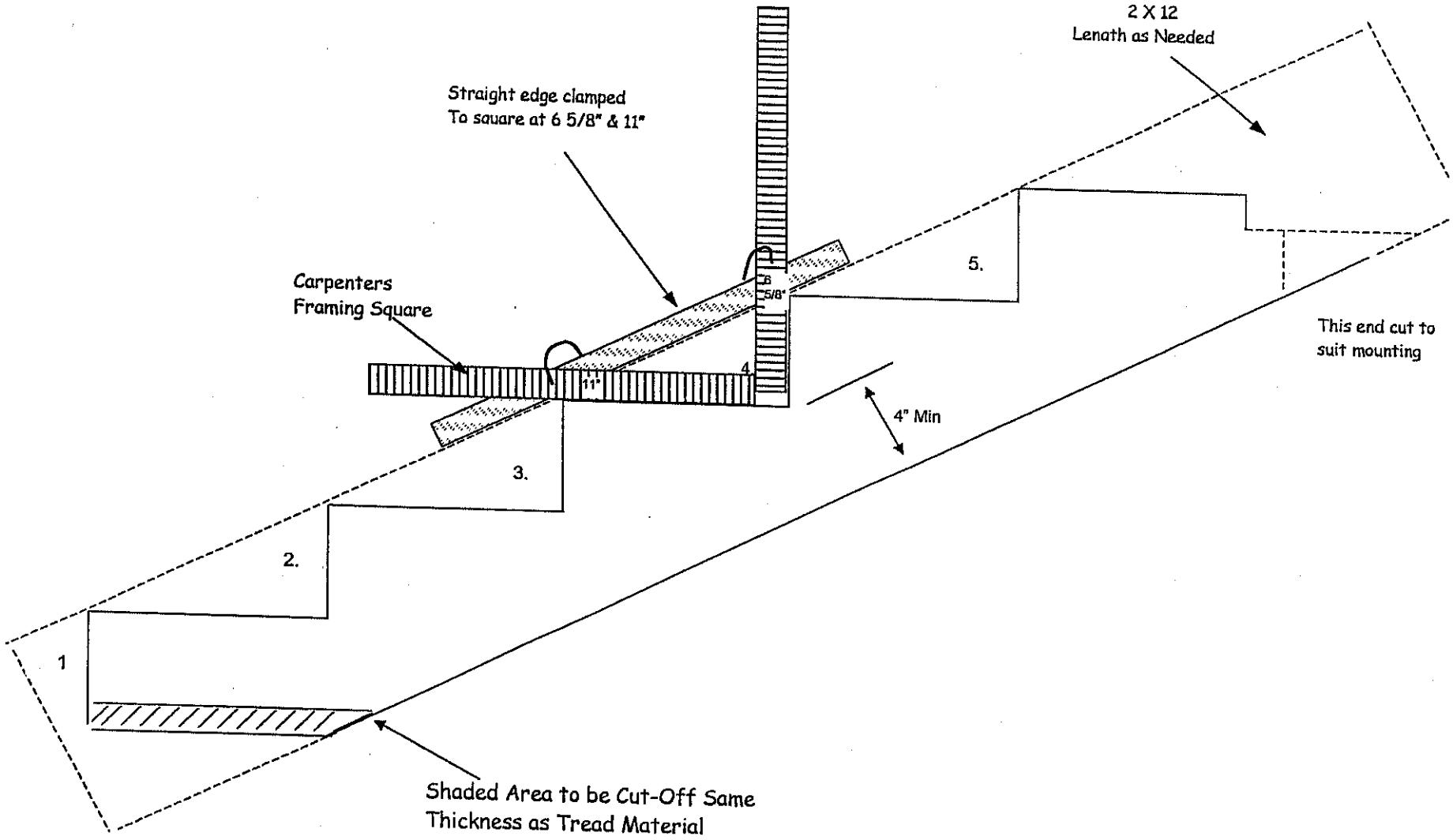
NOTE: Pre-manufactured stair stringers may not meet the rise & run requirements of the code.