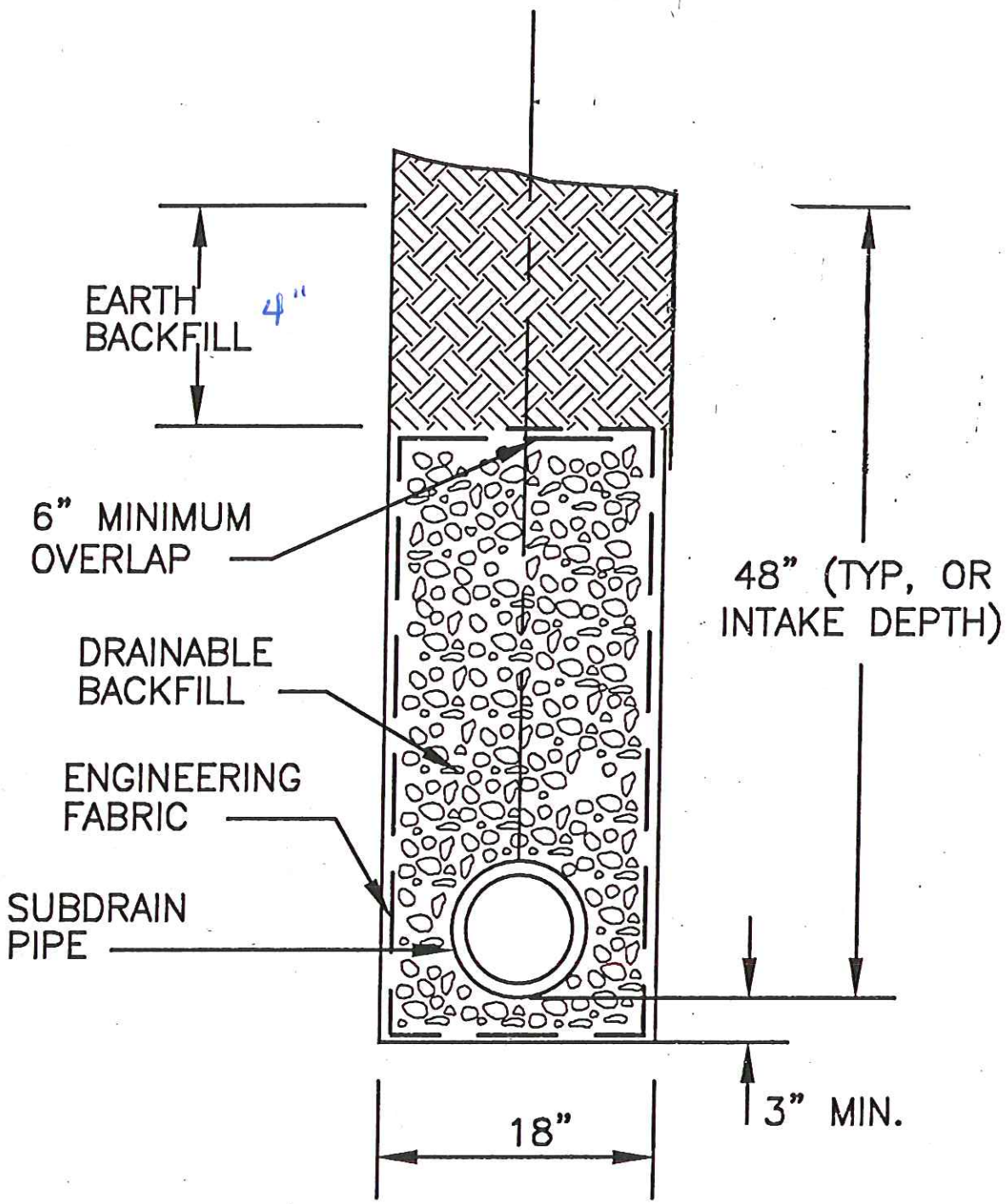

INSTALLATION