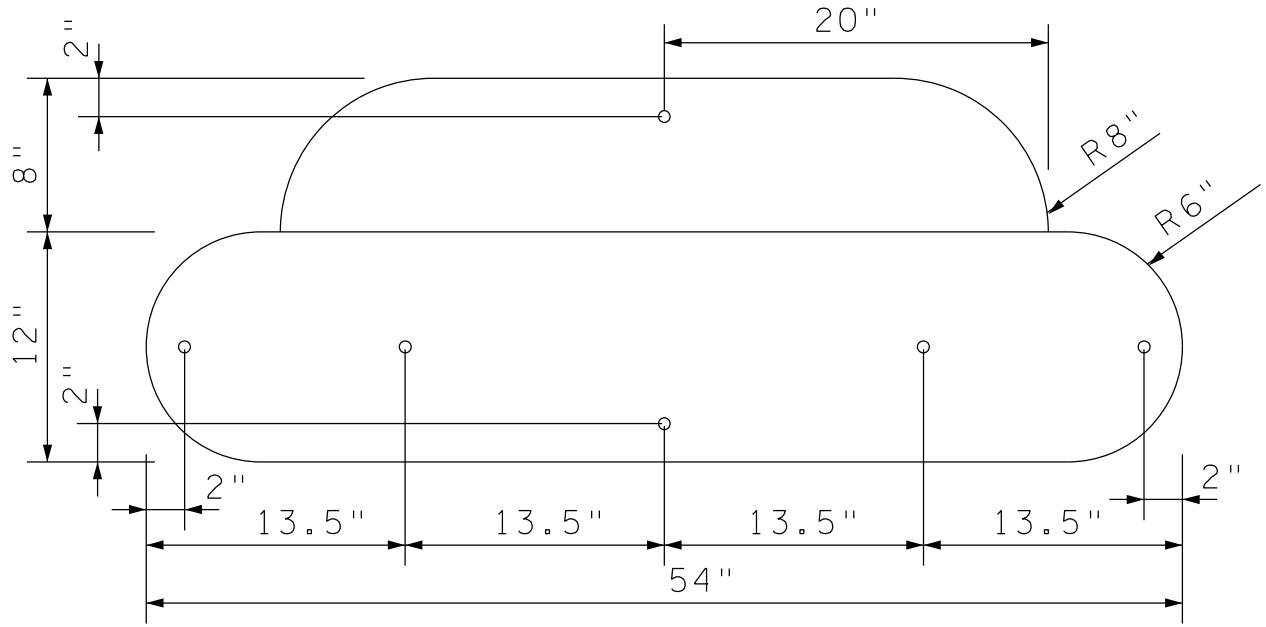

54" x 12" SIGN BLANK
WITH 3/8" HOLES

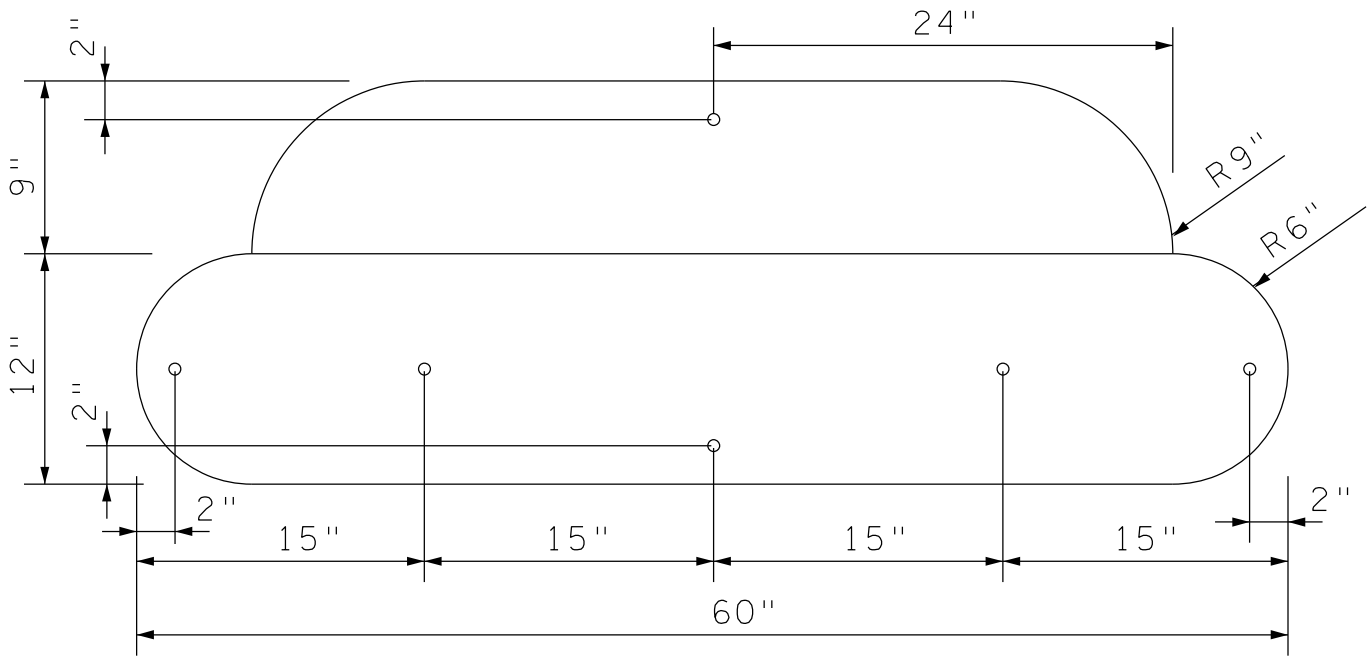

60" x 12" SIGN BLANK
WITH 3/8" HOLES

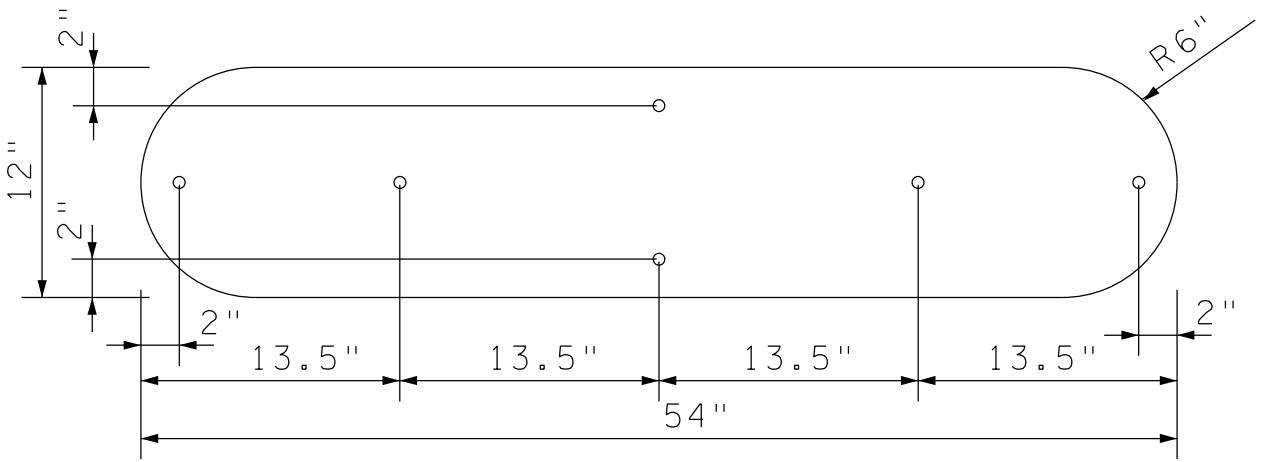

54" x 12" SIGN BLANK
WITH 3/8" HOLES

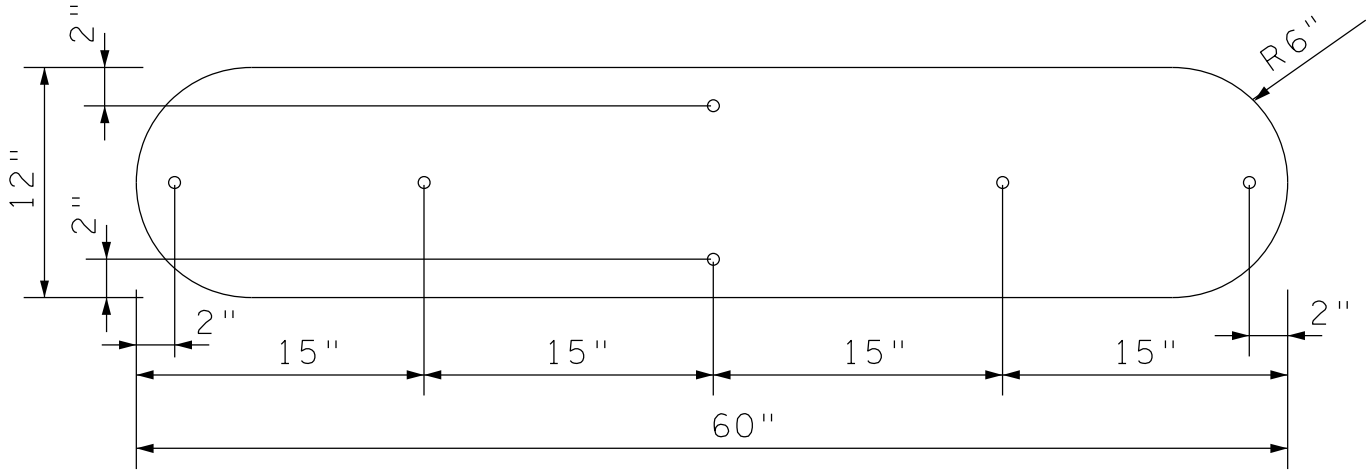

60" x 12" SIGN BLANK
WITH 3/8" HOLES

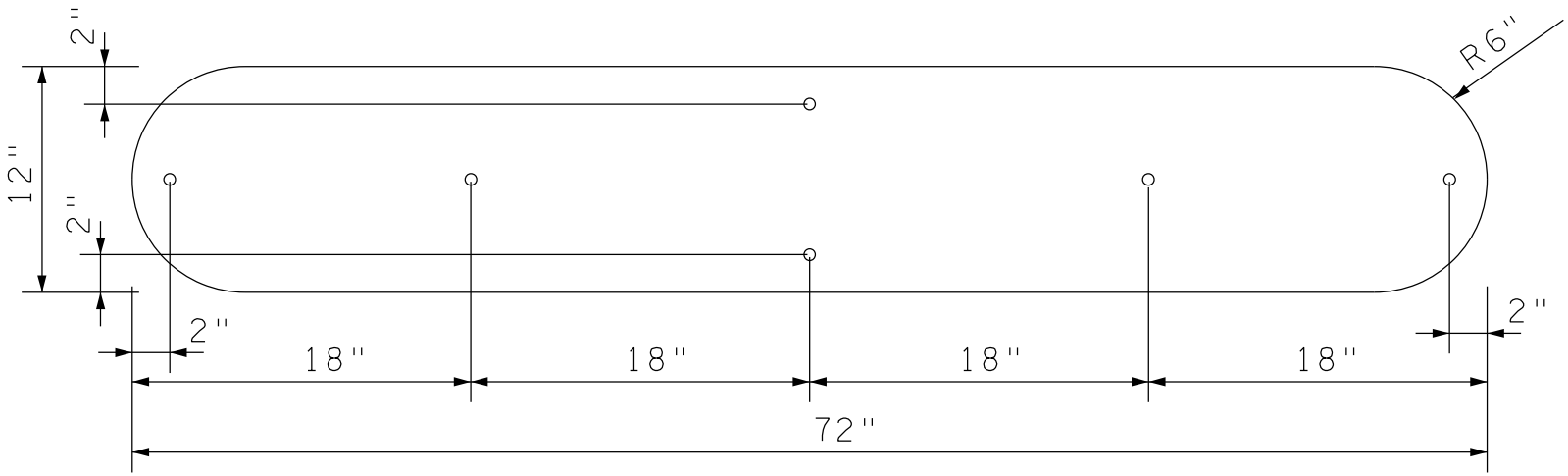

72" x 12" SIGN BLANK
WITH 3/8" HOLES

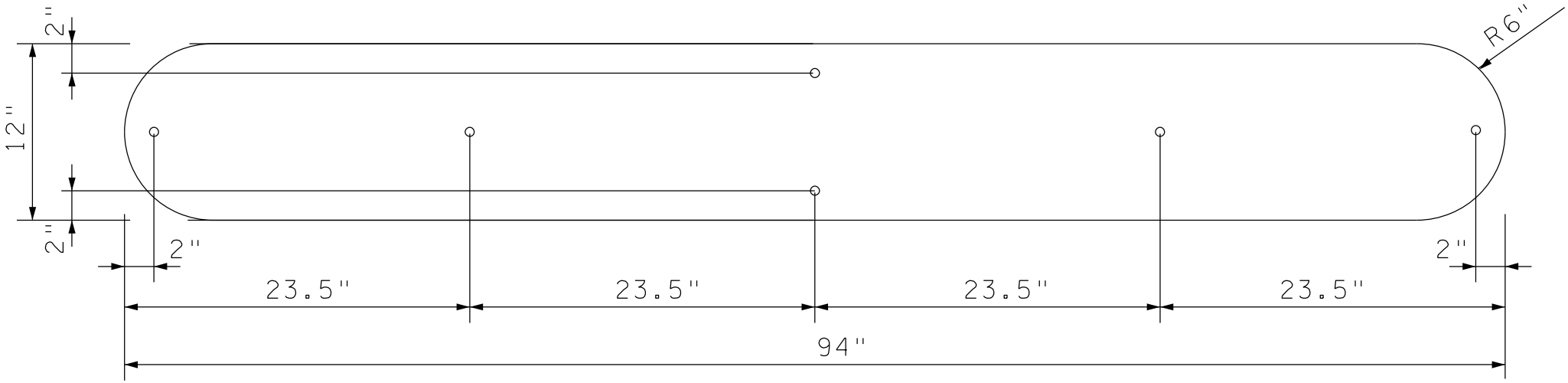

94" x 12" SIGN BLANK
WITH 3/8" HOLES