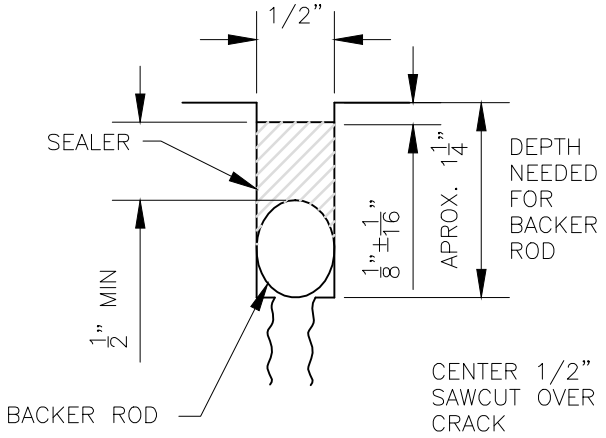

CLASS I CRACK

(RANDOM CRACK LESS THAN 1/2" IN WIDTH)

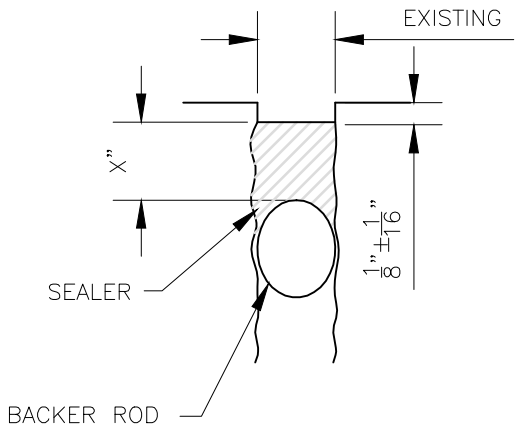

CLASS II CRACK

(RANDOM CRACK 1/2" TO 1 1/2" CRACK NOT SAWN)

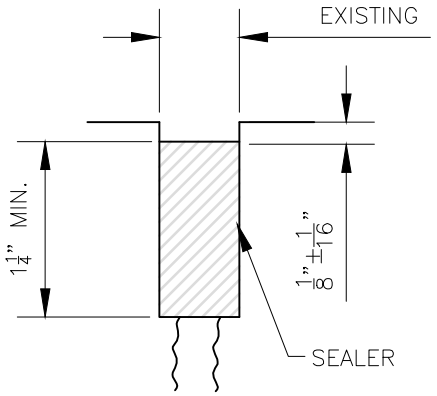

CENTER SAWCUT OVER EXISTING JOINT

CLASS III JOINT

(EXISTING JOINT 1/2" OR LESS IN WIDTH)

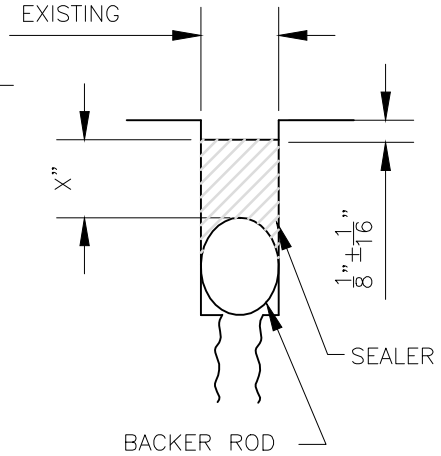

CENTER SAWCUT OVER EXISTING JOINT

CLASS IV JOINT

(EXISTING WIDTH >1/2" TO 1 1/2")

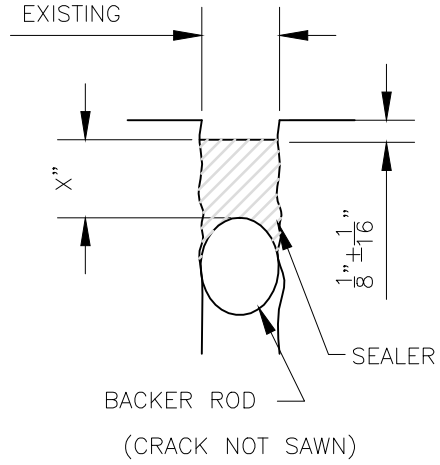

CLASS V CRACK OR JOINT

(EXISTING WIDTH 1 1/2" TO 3")

X" = 1/2" MINIMUM WHEN WIDTH IS 1" OR LESS
2:1 (WIDTH:DEPTH) WHEN WIDTH IS GREATER THAN 1"

NOTE:
MINIMUM DIAMETER OF BACKER ROD SHALL BE ONE NOMINAL SIZE LARGER THAN THE EXISTING CRACK OR JOINT.

FILE NO.: 2800-020	CEDAR RAPIDS METROPOLITAN AREA STANDARD DETAILS FOR PUBLIC IMPROVEMENTS	
APPROVAL DATE: APRIL 2003		
REVISION NO.: 1	PCC PAVEMENT CRACK AND JOINT CLEANING AND SEALING DETAILS – SHEET 1 OF 2	NO. 2800-020
REVISION DATE: MAY 2014		

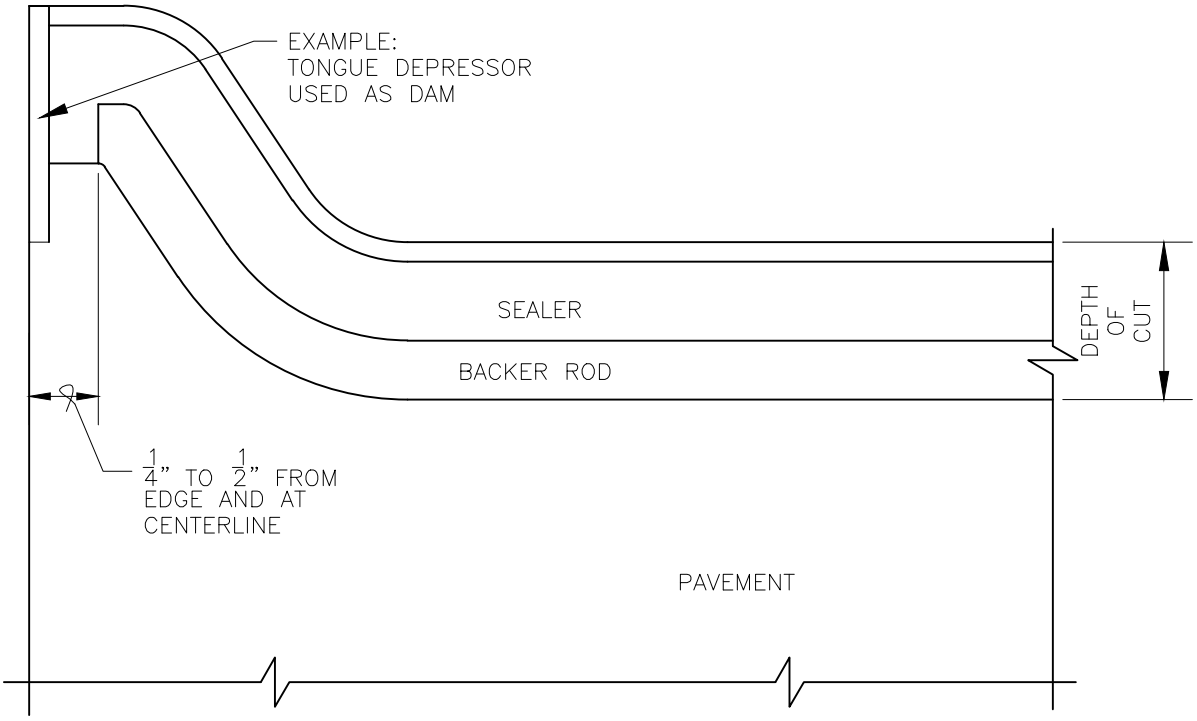

BACKER ROD PLACEMENT DETAIL

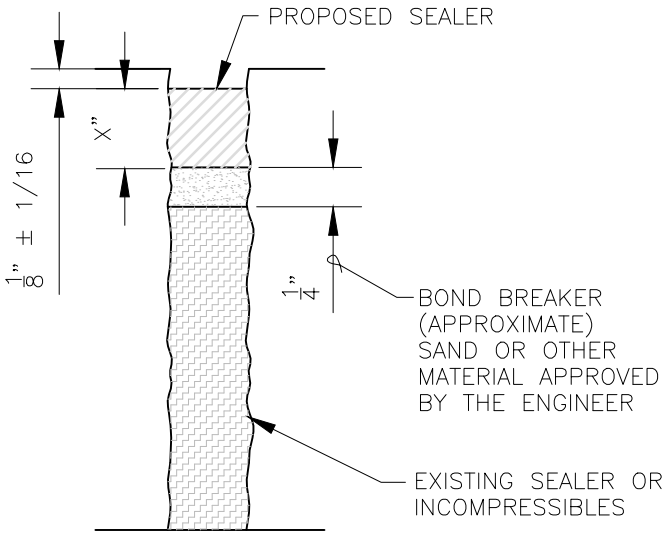

ALTERNATE BOND BREAKER

FOR
CLASS II CRACK
CLASS IV JOINT
CLASS V CRACK OR JOINT

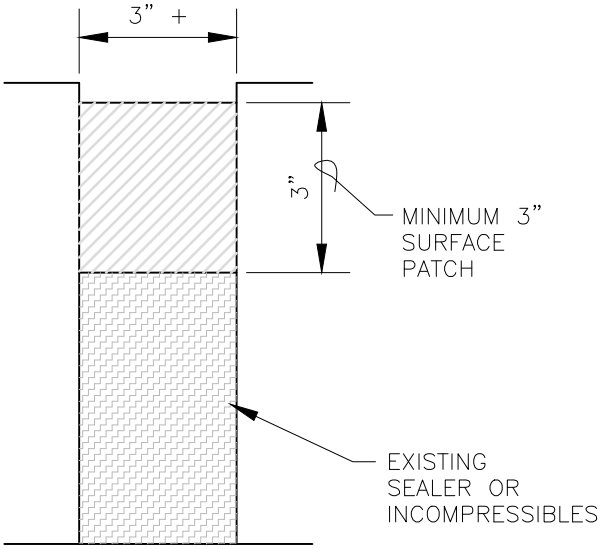

GREATER THAN 3" OPENING

X" = 2:1 (WIDTH:DEPTH) WHEN WIDTH IS GREATER THAN 1"

FILE NO.: 2800–020	CEDAR RAPIDS METROPOLITAN AREA STANDARD DETAILS FOR PUBLIC IMPROVEMENTS	
APPROVAL DATE: APRIL 2003		
REVISION NO.: 1	PCC PAVEMENT CRACK AND JOINT CLEANING AND SEALING DETAILS – SHEET 2 OF 2	NO. 2800–020
REVISION DATE: MAY 2014		