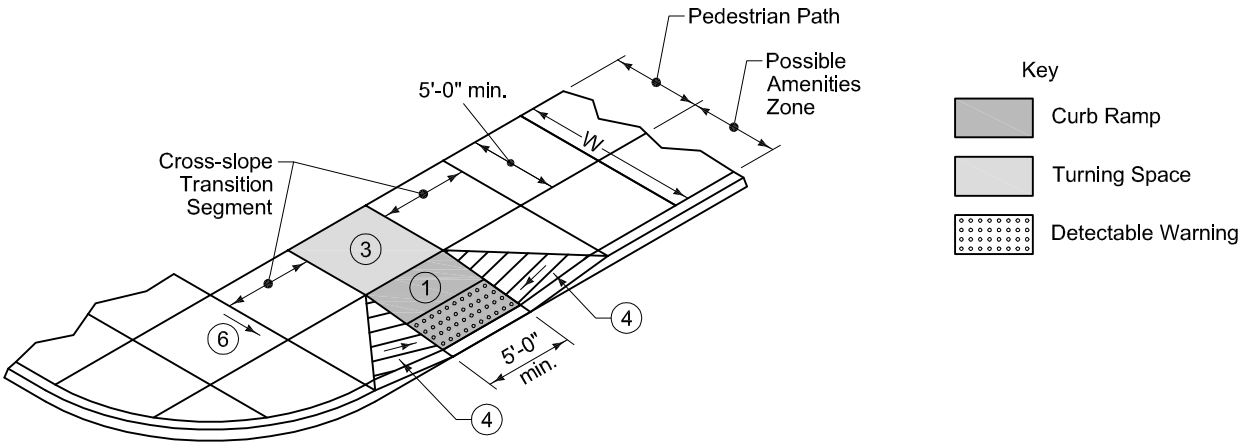

PERPENDICULAR CURB RAMP
(For Contiguous Sidewalk)

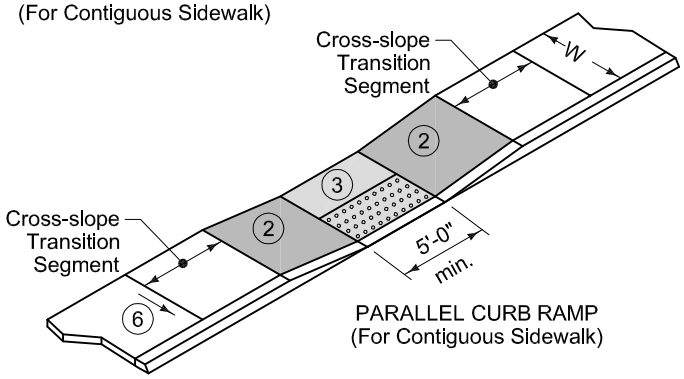

PARALLEL CURB RAMP
(For Contiguous Sidewalk)

1. Perpendicular Curb Ramp: Target running slope of 6.25% with maximum running slope of 8.3%. Match pedestrian street crossing cross slope at back of curb. At mid-block crossings, cross slope may match roadway grade.
2. Parallel Ramp: Target cross slope of 1.5% with a maximum cross slope of 2.0%.
3. Turning Space: Minimum 5 feet by 5 feet. Target slope = 1.5%; maximum slope = 2.0% **IN ALL DIRECTIONS**. Landing space to be tied to the ramp on one side each direction. Mid-block crossing: cross slope of landing may exceed 2.0% to match roadway grade. Minimum 5 feet by 5 feet.
4. Flare (10% max.) required if ramp is contiguous with sidewalk.
5. Parking may be grass or other surface
6. Match existing sidewalk cross slope (typ).

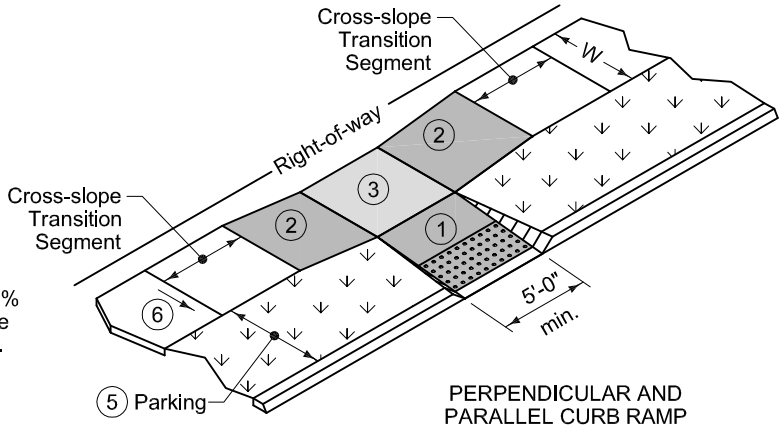

PERPENDICULAR AND
PARALLEL CURB RAMP
(For Sidewalk with Parking)

FILE NO.: 2700–202	CEDAR RAPIDS METROPOLITAN AREA STANDARD DETAILS FOR PUBLIC IMPROVEMENTS	
APPROVAL DATE: MAY 2014		
REVISION NO.: 2	STANDARD CURB RAMPS OUTSIDE OF INTERSECTION RADIUS	NO. 2700–202
REVISION DATE: AUG 2016		