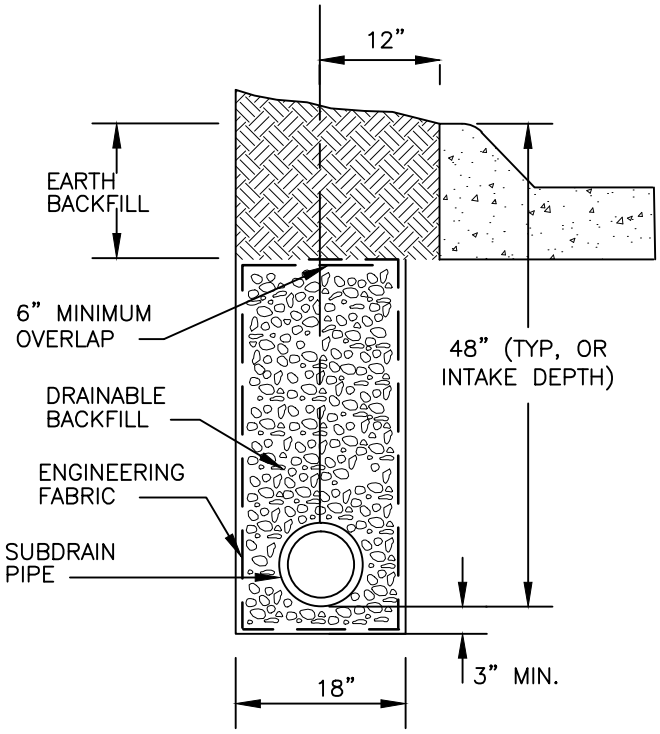

INSTALLATION ADJACENT TO EXISTING PAVEMENT

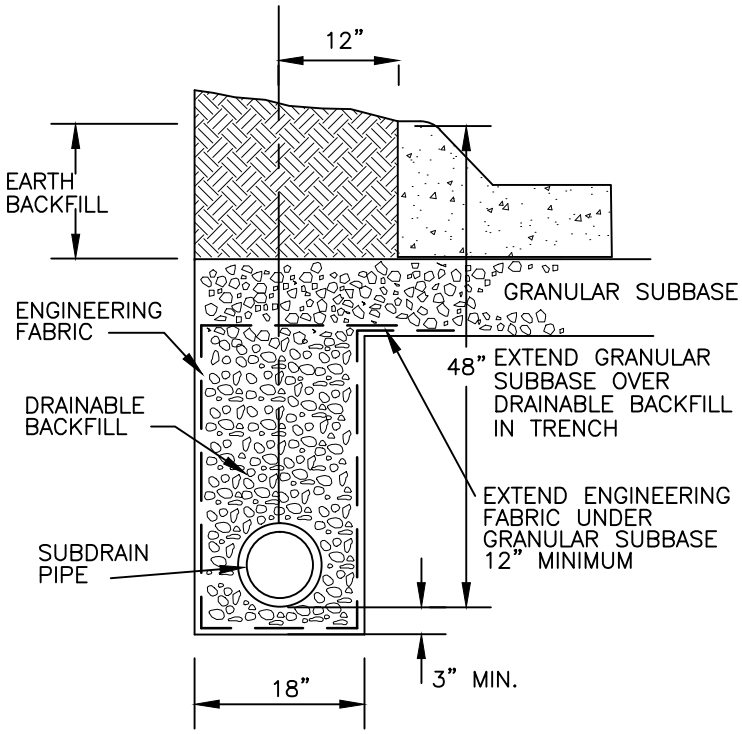

INSTALLATION ADJACENT TO NEW PAVEMENT

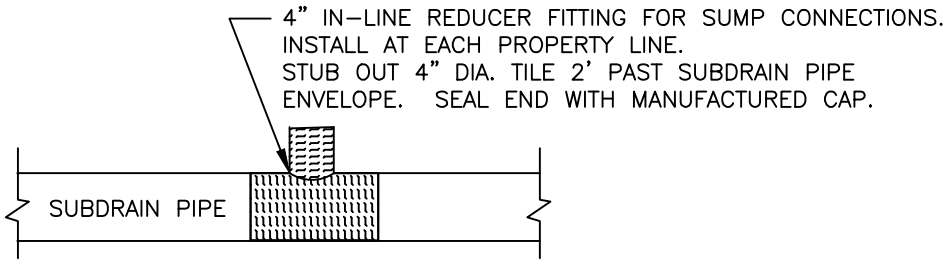

SERVICE CONNECTION

FILE NO.: 2400-090	CEDAR RAPIDS METROPOLITAN AREA STANDARD DETAILS FOR PUBLIC IMPROVEMENTS	
APPROVAL DATE: APRIL 2003		
REVISION NO.: 2	SUBDRAIN INSTALLATION	NO. 2400-090
REVISION DATE: MAY 2014		