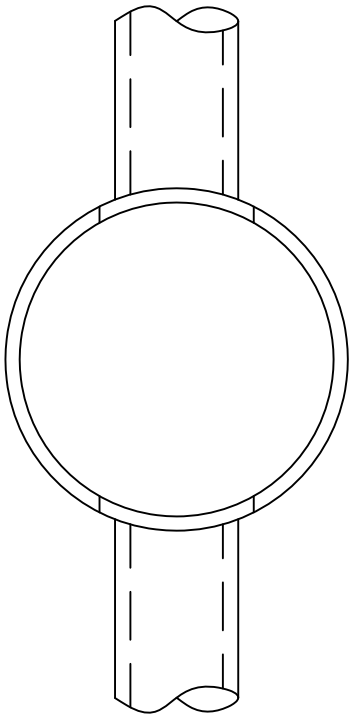

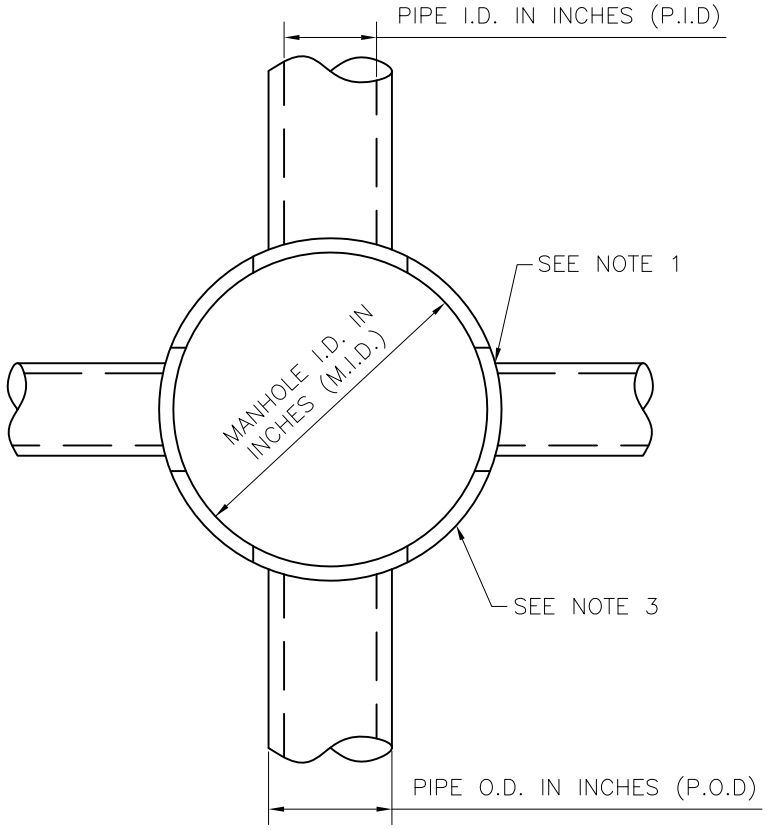

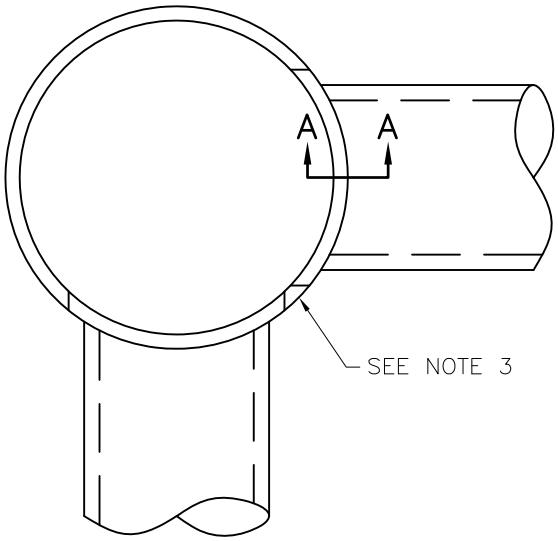

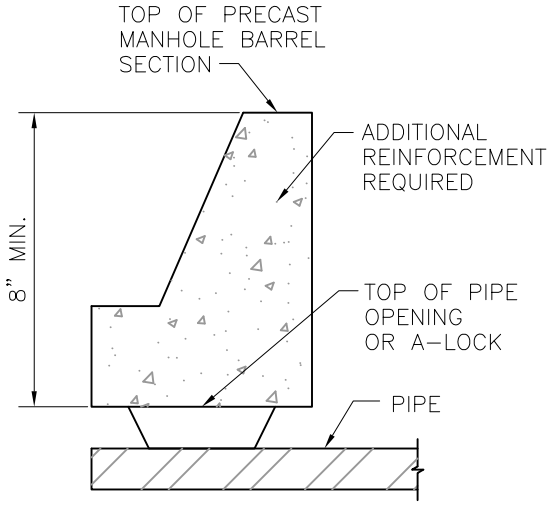

SECTION A–A

NOTES:

1. TYPICAL OPENING WIDTH IN MANHOLE WALL, TO ACCEPT PIPE, SHALL NOT EXCEED P.O.D. PLUS 6–INCHES.
2. TYPICAL MAXIMUM PIPE SIZE (P.I.D.) INTO A CIRCULAR PRECAST STRUCTURE SHALL BE M.I.D./2.
3. A MINIMUM OF 12–INCHES OF CONCRETE SHALL REMAIN BETWEEN VERTICAL EDGES OF PIPE OPENINGS FOR CIRCULAR STRUCTURES. ADDITIONAL REINFORCEMENT WILL BE REQUIRED.

FILE NO.: 2300–040	CEDAR RAPIDS METROPOLITAN AREA STANDARD DETAILS FOR PUBLIC IMPROVEMENTS	
APPROVAL DATE: APRIL 2003		
REVISION NO.:	MANHOLE AND PIPE SIZES	NO. 2300–040
REVISION DATE:		