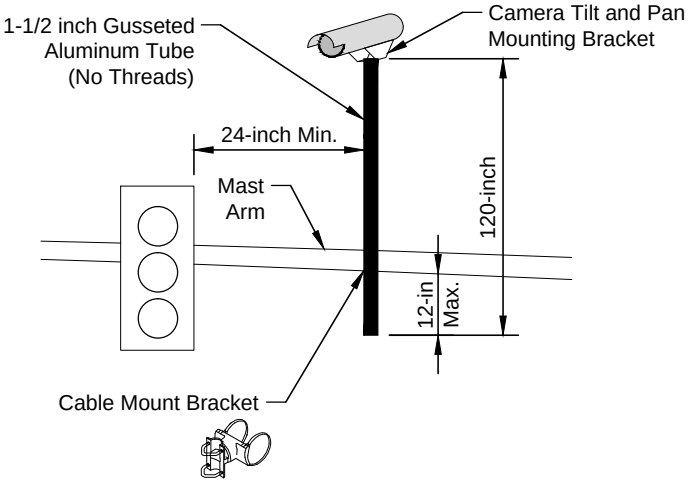

DETAIL "A"
MAST ARM MOUNTING DETAIL

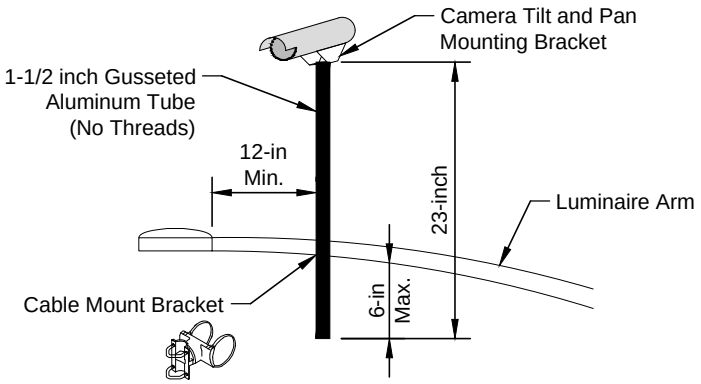

DETAIL "B"
LUMINAIRE ARM MOUNTING DETAIL

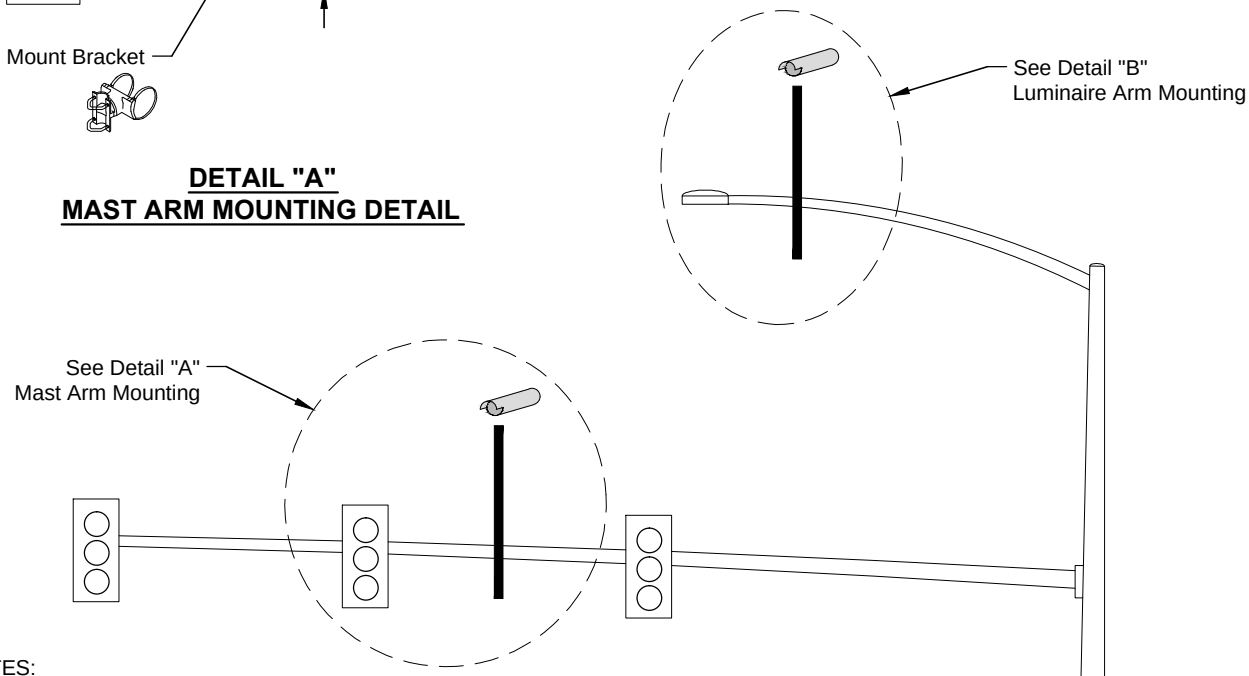

NOTES:

1. The Video Detector Mounting Detail is for reference only and shows desirable mounting heights and mounting hardware. The Contractor shall coordinate with the Video Detection System vendor to determine the appropriate mounting hardware and mounting heights to provide a fully functional Video Detection System with cameras at the locations shown in the plans. Additional hardware necessary to complete the installation but not shown should also be provided as part of this item.

2. The Contractor shall submit shop drawings for all mounting hardware used to install the Video Detection System for approval by the Engineer.

3. The Contractor will be required to coordinate the installation of video detection cameras for the Video Detection System with the overhead Utility companies to ensure that it does not affect the operation of the Video Detection System due to utility lines located in the view of the video detection cameras. The Contractor should also make sure that any required clearances from overhead utilities are provided.

4. Preferred location of video detector is the mast arm mounting located over the center of the approach.

FILE NO.:	**CEDAR RAPIDS METROPOLITAN AREA** **STANDARD DETAILS FOR PUBLIC IMPROVEMENTS**
DATE: 12/16/2014	
REVISION NO.:	**VIDEO DETECTOR MOUNTING DETAIL**
REVISION DATE:	NO. **16570-072**

File Name: w:\tools and utilities\drafting standards\cma std details\cadd files\16570-010-additional cabinet base details.dwg