DETECTOR LOOP DETAILS

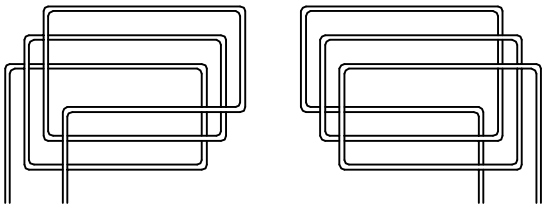

ALL DETECTOR LOOPS SHALL BE WOUND IN A CLOCKWISE CONFIGURATION, AS VIEWED FROM THE LEAD–IN CONNECTION SLOT. FROM THE LEAD–IN CONNECTION, THE BOTTOM CONDUCTOR IN THE SAWED SLOT SHALL BE IDENTIFIED AND LABELED AS THE NEGATIVE LEAD. THE NEGATIVE LEAD SHALL BE CONNECTED TO THE BLACK CONDUCTOR OF THE CABLE PATH AND THE POSITIVE LEAD SHALL BE CONNECTED TO THE COLOR CODED CONDUCTOR OF THE CABLE PAIR.

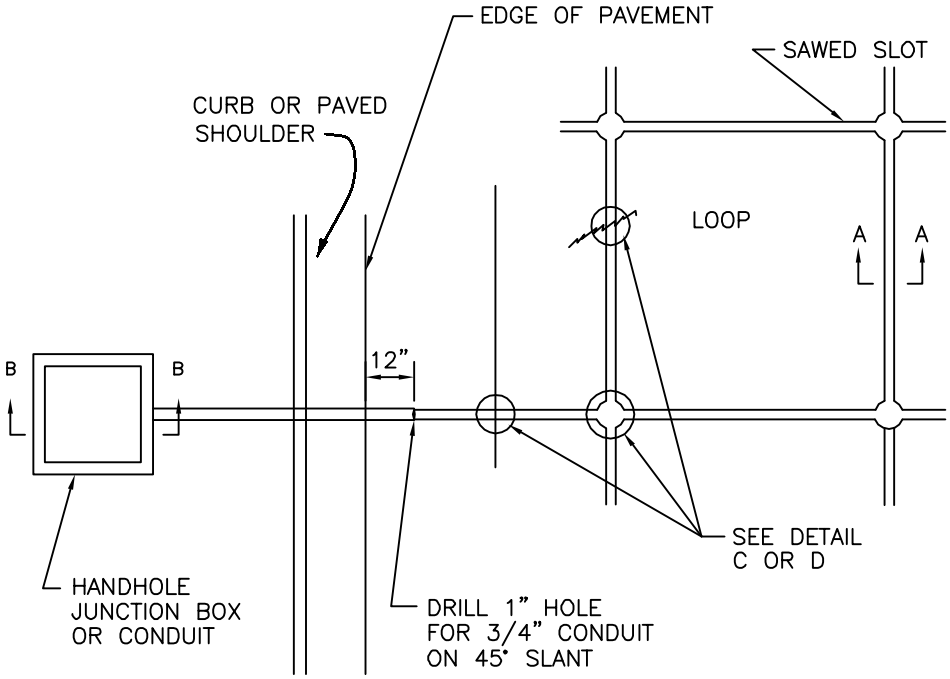

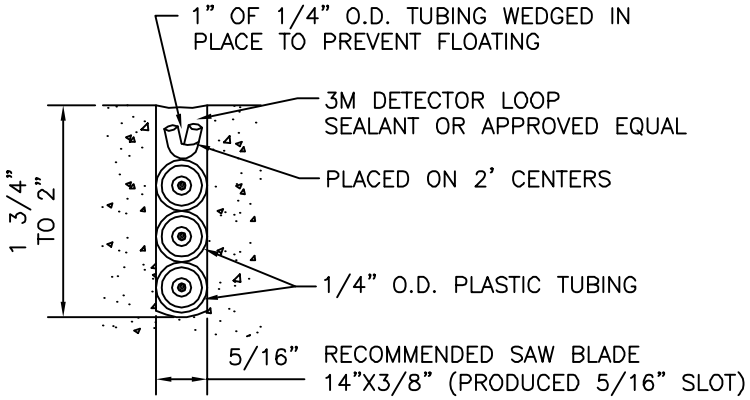

SECTION A–A

GENERAL NOTES:

1. ALL LOOPS SHALL HAVE SEPARATE LEAD–IN SAWCUTS AND CONDUIT BETWEEN THE LOOP AND THE HANDHOLE.

2. SAWING OF NEW P.C. CONCRETE PAVEMENT SHALL NOT OCCUR UNTIL AT LEAST SEVEN DAYS AFTER PLACEMENT UNLESS APPROVED BY ENGINEER.

FILE NO.: 16570–070	CEDAR RAPIDS METROPOLITAN AREA STANDARD DETAILS FOR PUBLIC IMPROVEMENTS	
APPROVAL DATE: APRIL 2003		
REVISION NO.: 1	TRAFFIC DETAILS – DETECTOR LOOP DETAILS SHEET 1 OF 2	NO. 16570–070
REVISION DATE: APRIL 2003		

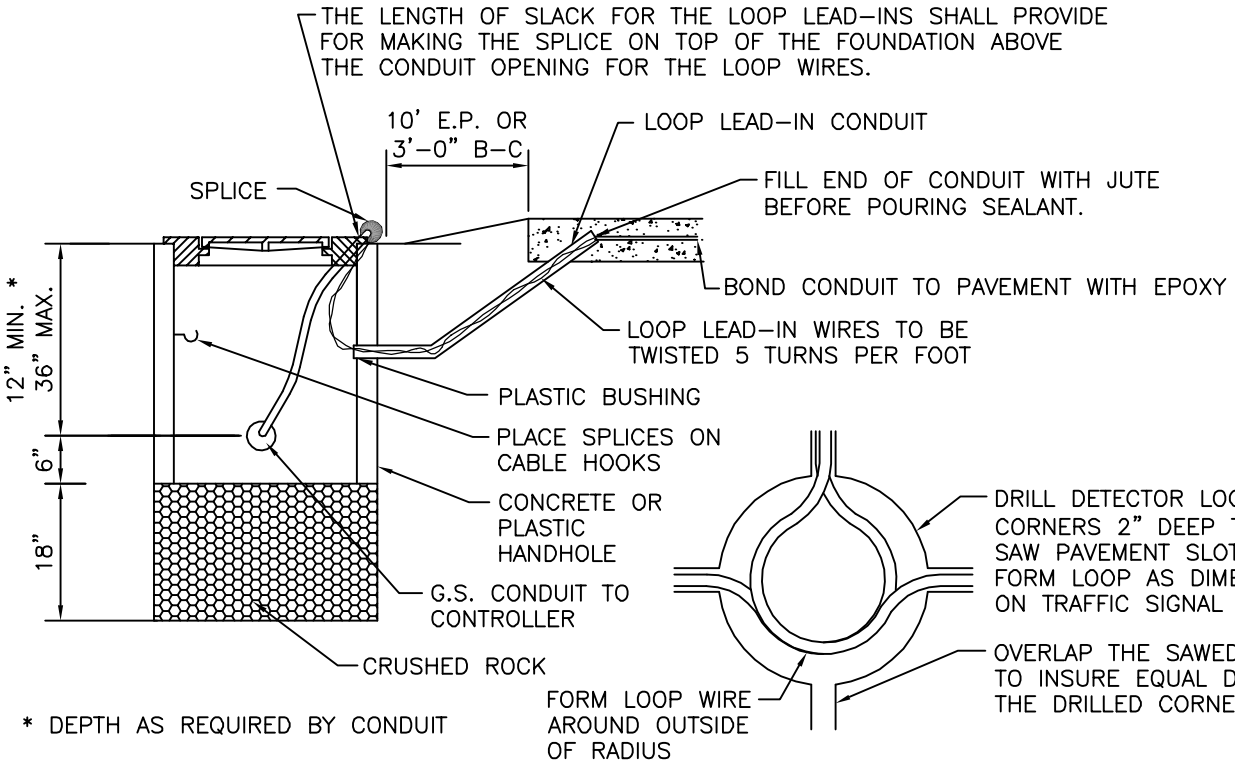

SECTION B–B

DETAIL C

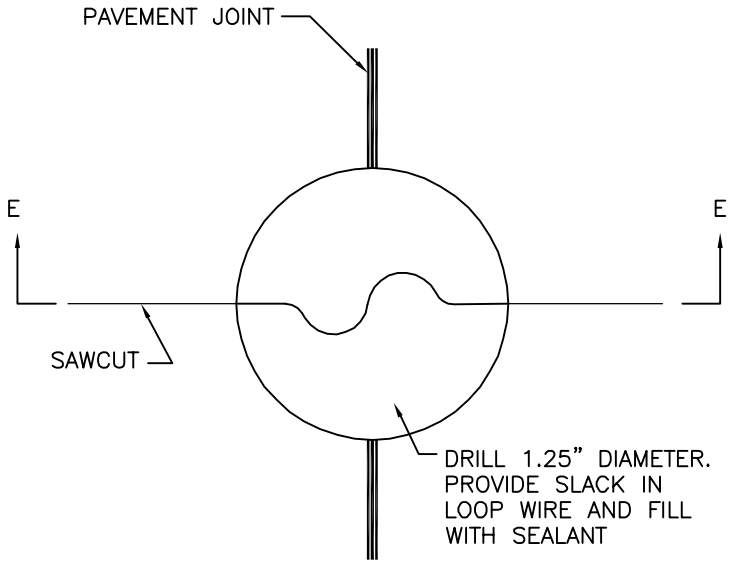

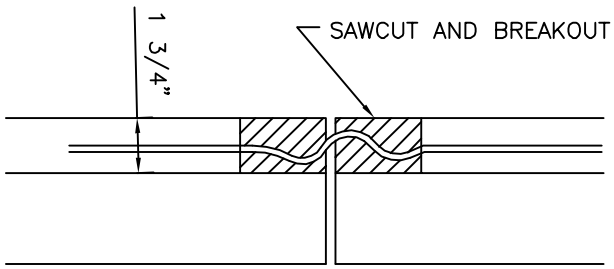

DETAIL D

SECTION E–E

(LOOP WIRE TREATMENT AT PAVEMENT JOINTS AND CRACKS)

FILE NO.: 16570–070	CEDAR RAPIDS METROPOLITAN AREA STANDARD DETAILS FOR PUBLIC IMPROVEMENTS	
APPROVAL DATE: APRIL 2003		
REVISION NO.: 1	TRAFFIC DETAILS – DETECTOR LOOP DETAILS SHEET 2 OF 2	NO. 16570–070
REVISION DATE: APRIL 2003		