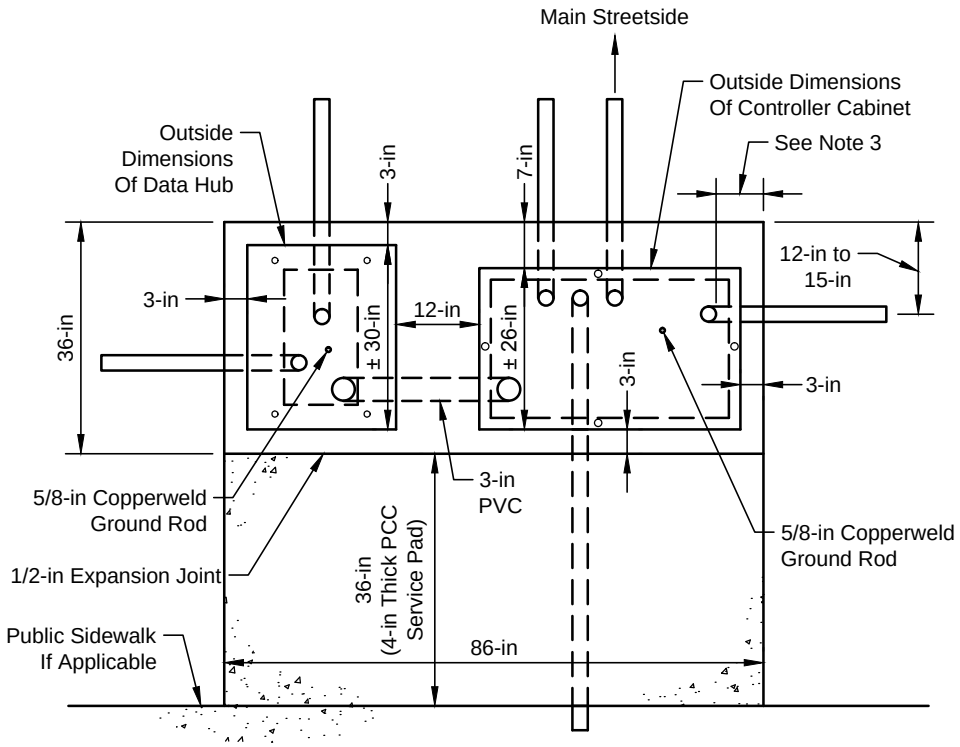

PLAN

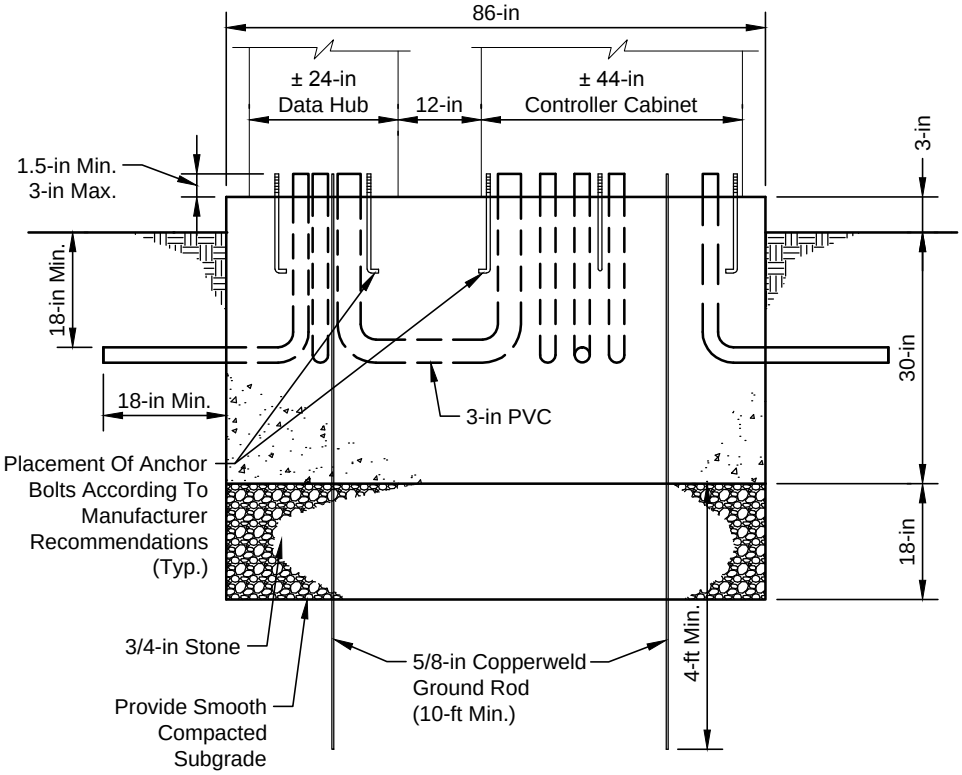

SECTION

Notes:

1. Plug unused ends with removable cap, plug or other device.
2. Minimum clearance between conduits will be 2-inches.
3. Minimum clearance from sides will be 10-inches.
4. Unused stubs will extend out beyond the base not less than 18-inches.
5. All stubs extending up to the surface of the base shall not be less than 1.5-inches and not be more than 3-inches above the surface of the base.
6. Conduits and plugs shall be in place with an approved tie bar before the base is poured.
7. All stubs extending above and below the base shall have the conduits plugged before pouring the base, except where the conduit stub is to be used. Those stubs used shall be connected to the conduit network and plugged on the ends extending up to the surface of the base before the base is poured.
8. Exposed concrete surfaces shall be cured using white-pigmented curing compound or plastic film meeting the requirements of sections 4105 and 4106 of Iowa D.O.T. Standard Specifications for Highway and Bridge Construction, latest edition.
9. Conduit shall be connected by a glued coupling such as that supplied with conduit.
10. Provide (2) 2-inch PVC conduit stubs for future use.

FILE NO.:	**CEDAR RAPIDS METROPOLITAN AREA STANDARD DETAILS FOR PUBLIC IMPROVEMENTS**
DATE: 12/16/2014	
REVISION NO.:	**DATA HUB AND CONTROLLER CABINET BASE**
REVISION DATE:	NO. **16570-011**

File Name: w:\tools and utilities\drafting standards\cma std details\cadd files\16570-010-additional cabinet base details.dwg