Cedar River Flood Control System Committee Update October 1, 2015

CEDAR RAPIDS

FLOOD | CONTROL SYSTEM

STRENGTHENING OUR COMMUNITY

Public Involvement following plan adoption

1) Cedar Rapids Kernels July 16
2) Downtown Farmer's Market July 18
   - Aesthetics
   - Fly-through video
   - Younger audience
   - Supportive of trails, river-access, and the aesthetic renderings.
   - 60 to 80 residents engaged

CEDAR RAPIDS
FLOOD CONTROL SYSTEM
STRENGTHENING OUR COMMUNITY

2016 Work 'Behind the Scenes' – a snapshot

Priority on low-lying areas of growth - Czech Village and NewBo

NewBo/Sinclair Area:

- Demolish Buildings in Sinclair Levee "Footprint."
- Remove foundations and other debris in the way of levee construction.
- Remove utilities from footprint of proposed levee.
- Construct exterior of 10th Avenue Pump Station, the largest on the east side.

Czech Village:

- Relocating public utilities.

CEDAR RAPIDS
FLOOD CONTROL SYSTEM
STRENGTHENING OUR COMMUNITY

Czech Village | 17th to Landfill

- Public Utility Relocations Project (Contract Documents due spring 2016)
- Levee Project (Contract documents due fall 2016)

Czech Village | 12th to 17th

- Public Utility Relocations Project (Contract Documents due fall 2016)

Sinclair | 16th Avenue to the Aliant substation

- Clear trees from Sinclair levee footprint, relocate Reach 3 utilities, Environmental cleanup design, begin 10 Avenue Pump Station (bidding February 2016)

CEDAR RAPIDS
FLOOD CONTROL SYSTEM
STRENGTHENING OUR COMMUNITY

Moving Forward

- Develop 2-year construction plan to manage all contracts and documents.
- Subject to change as project components progress.
- Road map to guide forthcoming construction projects.

CEDAR RAPIDS
FLOOD CONTROL SYSTEM
STRENGTHENING OUR COMMUNITY

East Side Flood Control System

Dry Side Drainage Design

CEDAR RAPIDS

FLOOD | CONTROL SYSTEM

STRENGTHENING OUR COMMUNITY

Basis of Design

Designing for the **volume** of rainfall discharging into the river.

2 year storm

5 year storm

100 year storm

CEDAR RAPIDS
FLOOD CONTROL SYSTEM
STRENGTHENING OUR COMMUNITY

Basis of Design

Designing for the **intensity**: how fast the volume of runoff discharges into the river.

CEDAR RAPIDS
FLOOD CONTROL SYSTEM
STRENGTHENING OUR COMMUNITY

Interior Drainage Areas

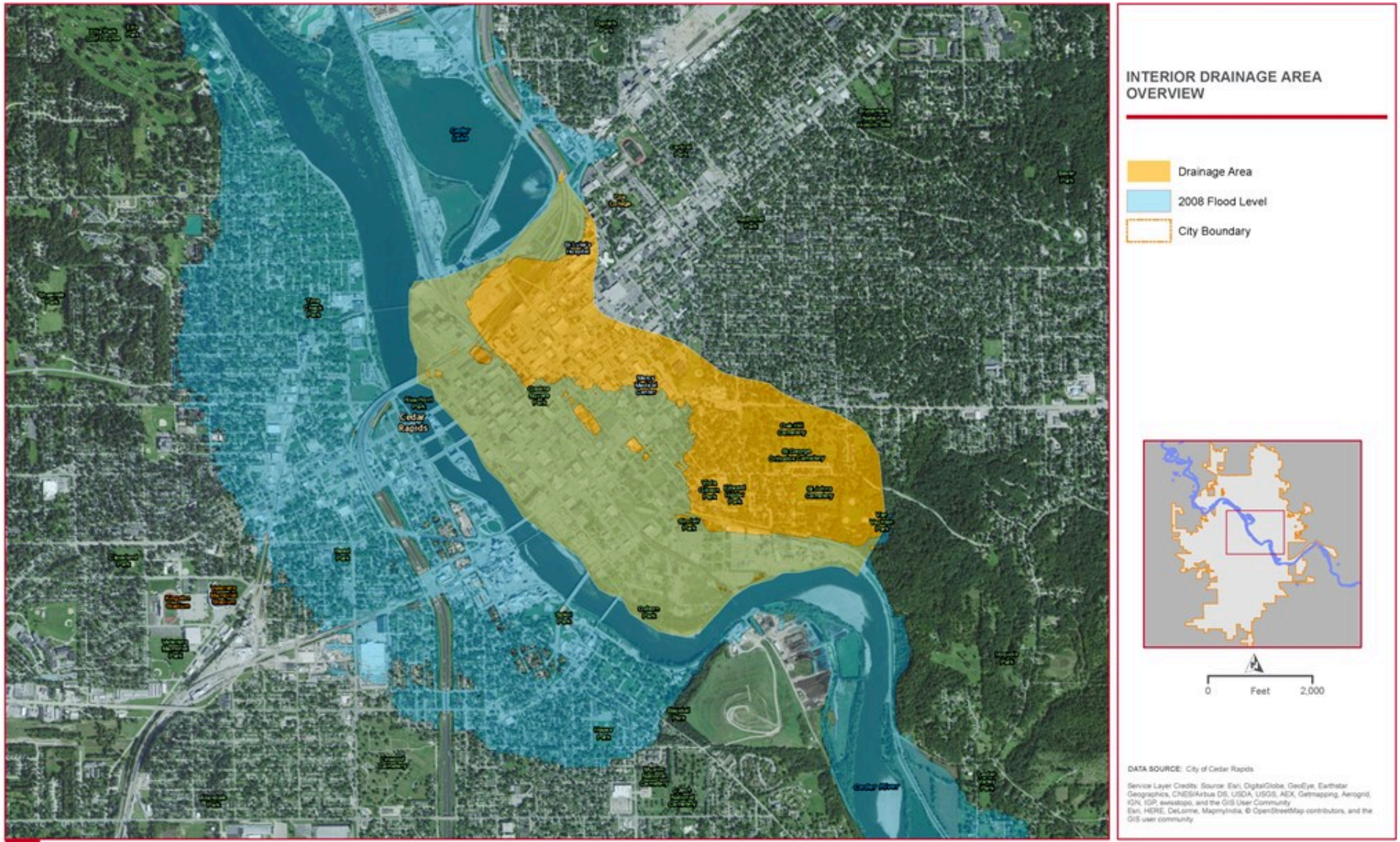

Pump Station – Interim Protection for NewBo

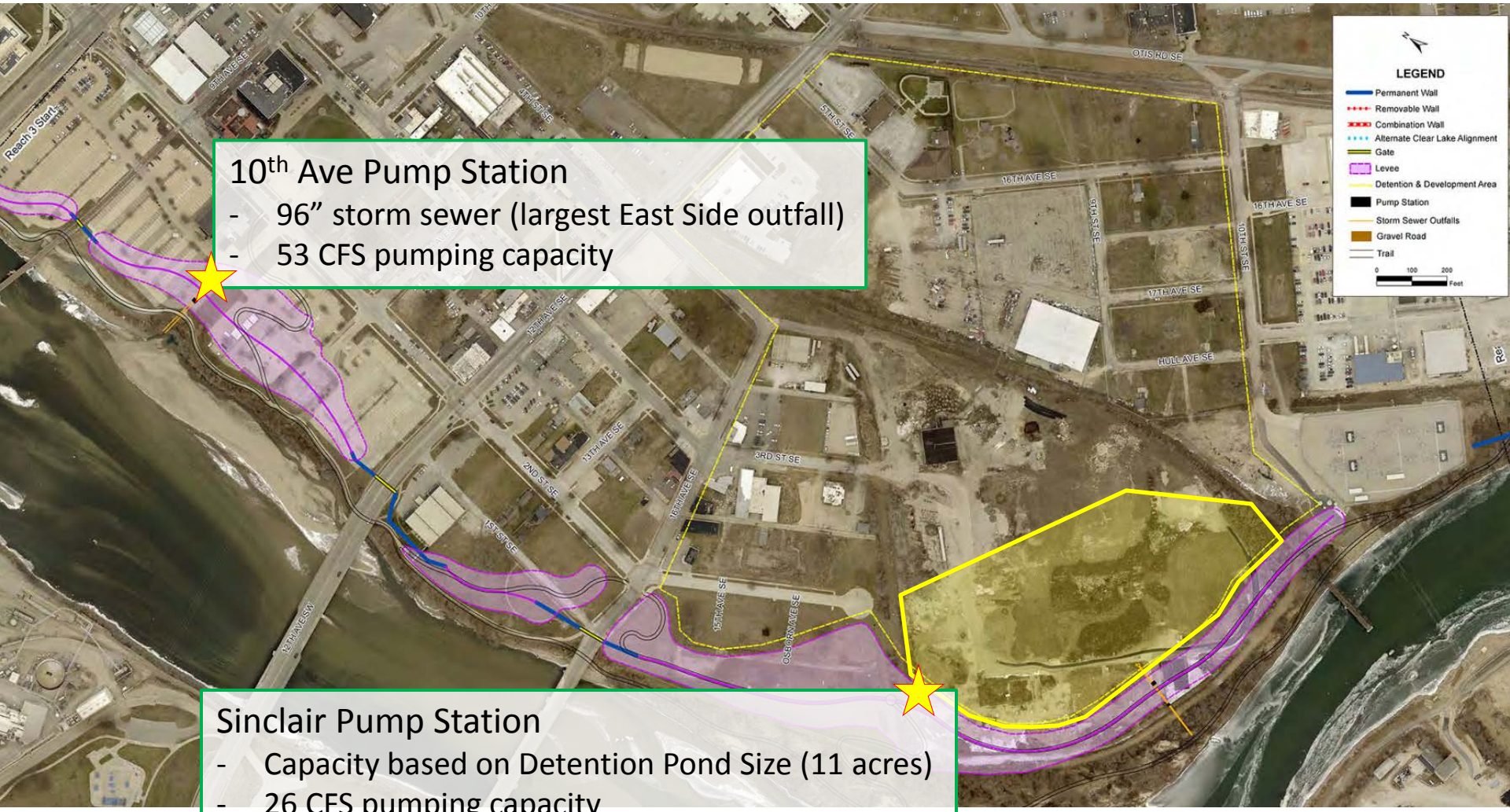

10th Ave Pump Station
- 96” storm sewer (largest East Side outfall)
- 53 CFS pumping capacity

Sinclair Pump Station
- Capacity based on Detention Pond Size (11 acres)
- 26 CFS pumping capacity

10th Ave Station

- Piping discharge over the wall
- Submersible pumps
- Mechanical bar screen
- Permanent stand-by generator (not shown)

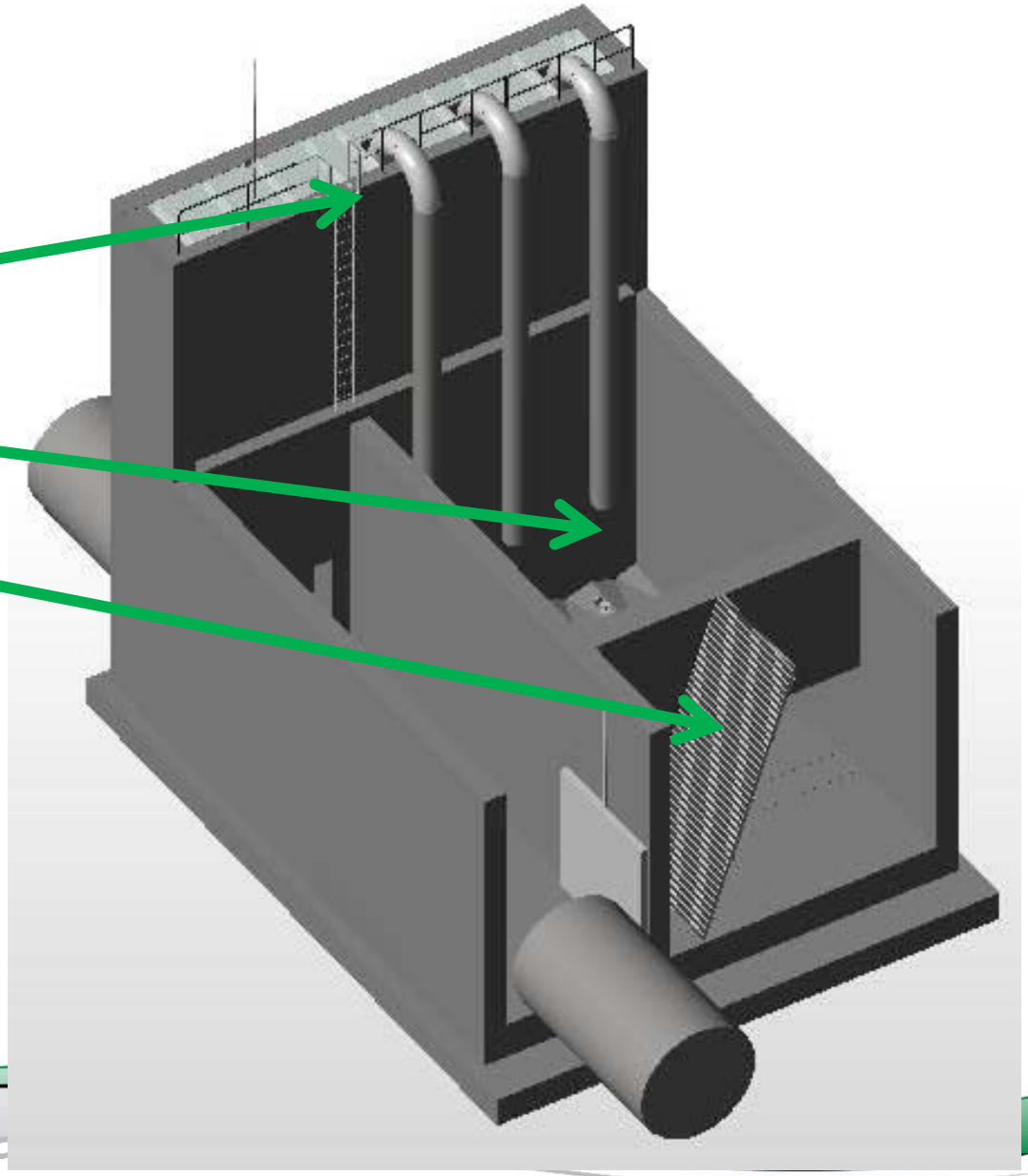

CEDAR RAPIDS
FLOOD CONTROL SYSTEM
STRENGTHENING OUR COMMUNITY

10th Ave Station Architecture
Complementing the Neighborhood

Sinclair Station Architecture

To come

January

CEDAR RAPIDS
FLOOD CONTROL SYSTEM
STRENGTHENING OUR COMMUNITY