CITY OF CEDAR RAPIDS
NW RECREATION CENTER

CEDAR RAPIDS, IOWA 52404

LOBBY

127

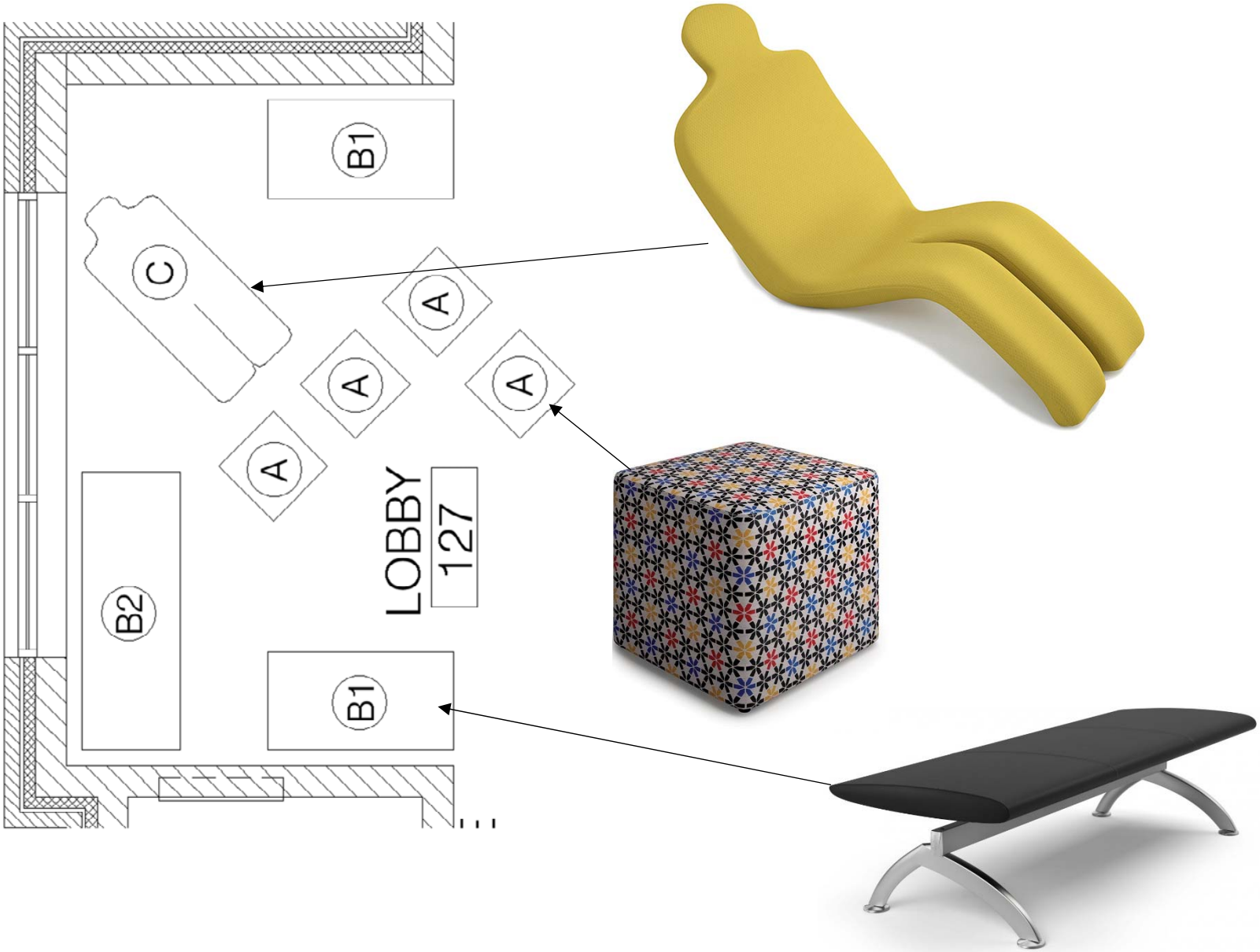

VENDING

105

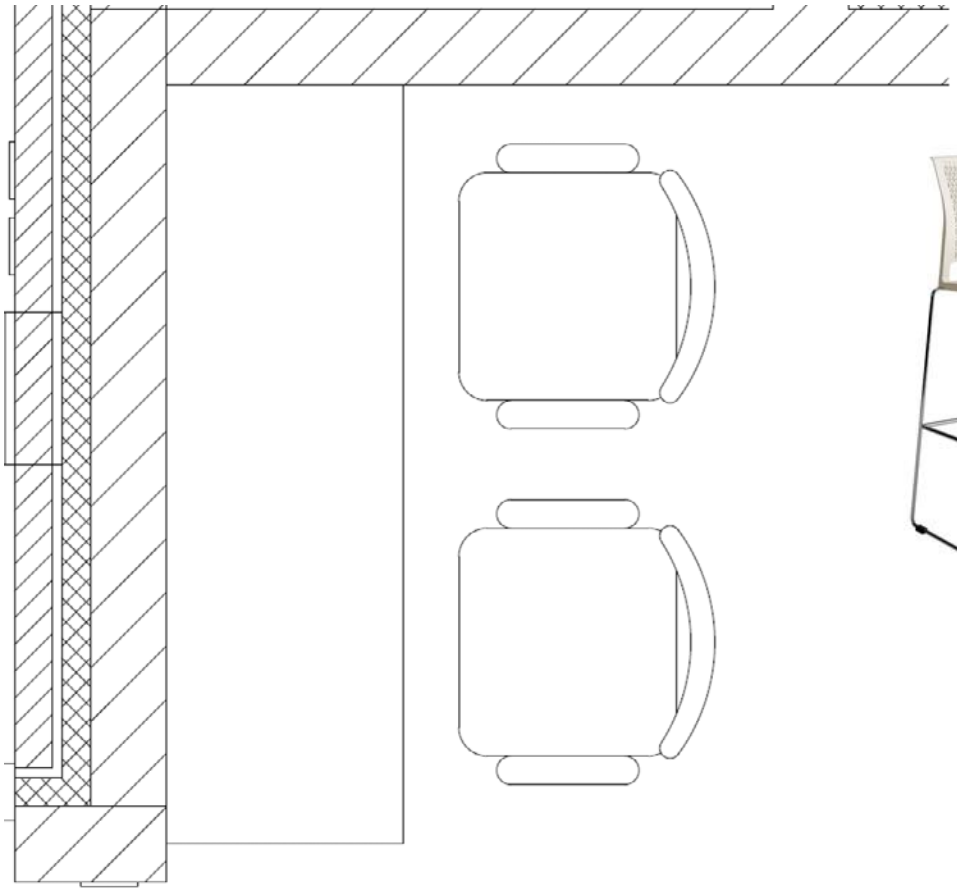

*Only comes in black

HALLWAY

108

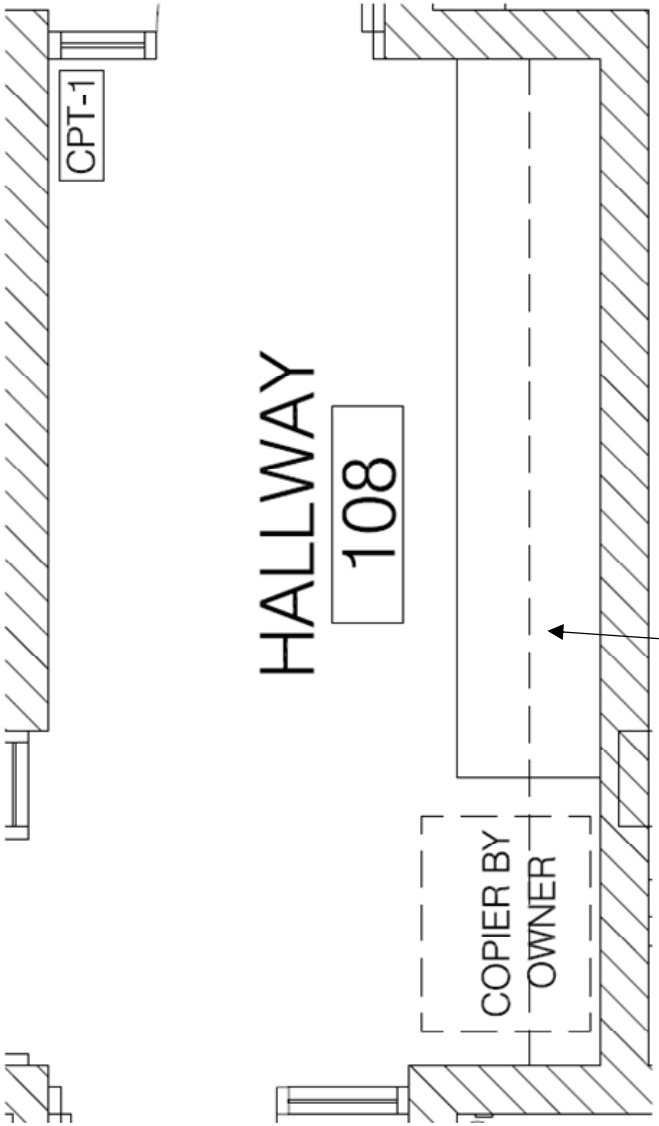

OFFICE

106 & 107

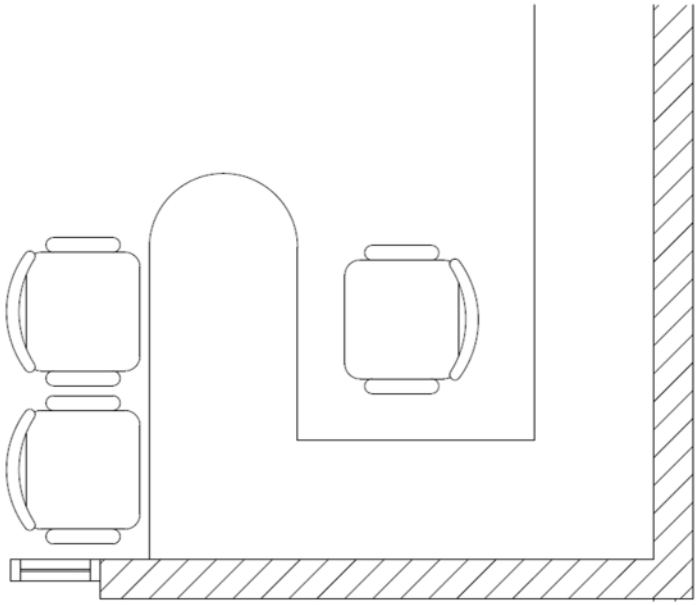

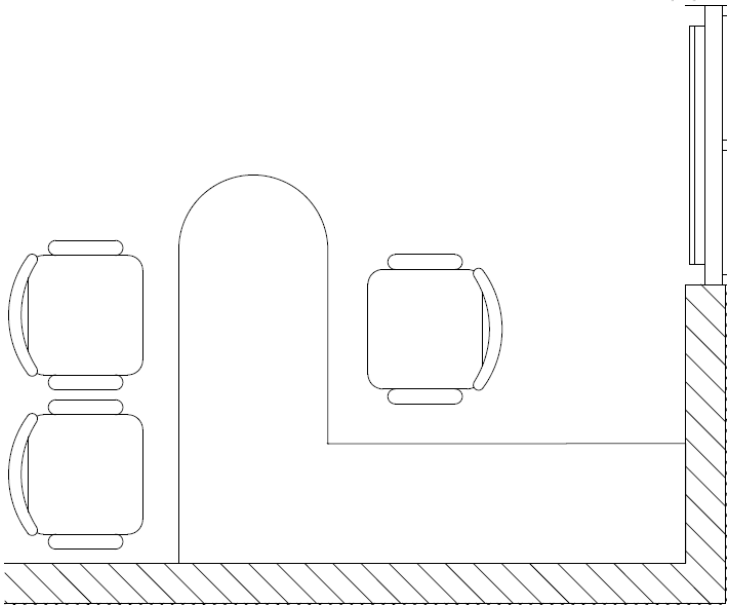

MEETING ROOM

110

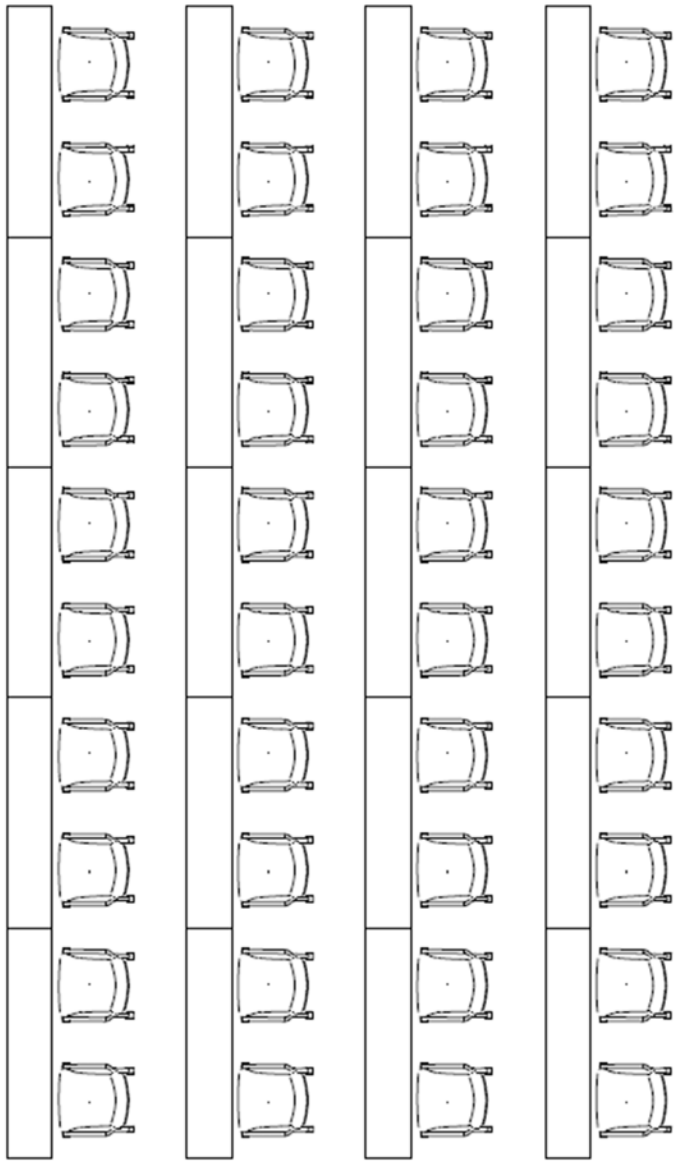

GYMNASIUM 1 & 2

118 & 119

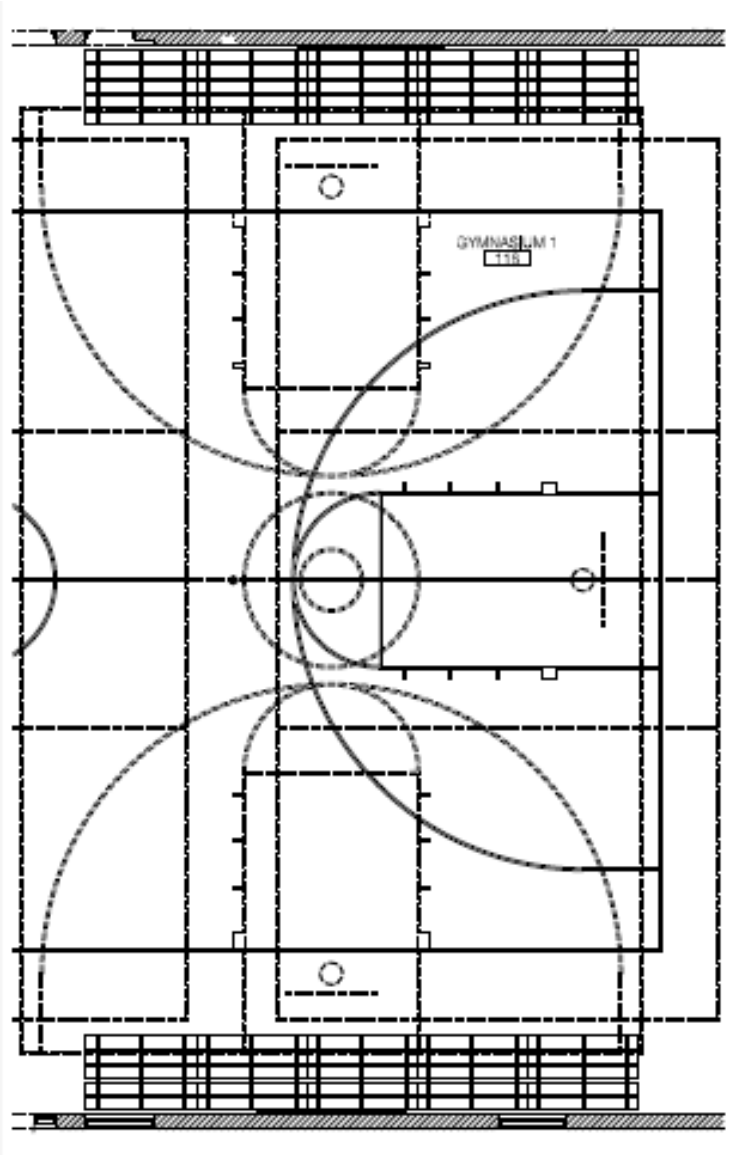

* Available Colors: White, Black, Red, Burgundy, Forest Green, Royal Blue, Yellow, and Tan

ACTIVITY ROOM-ALTERNATE
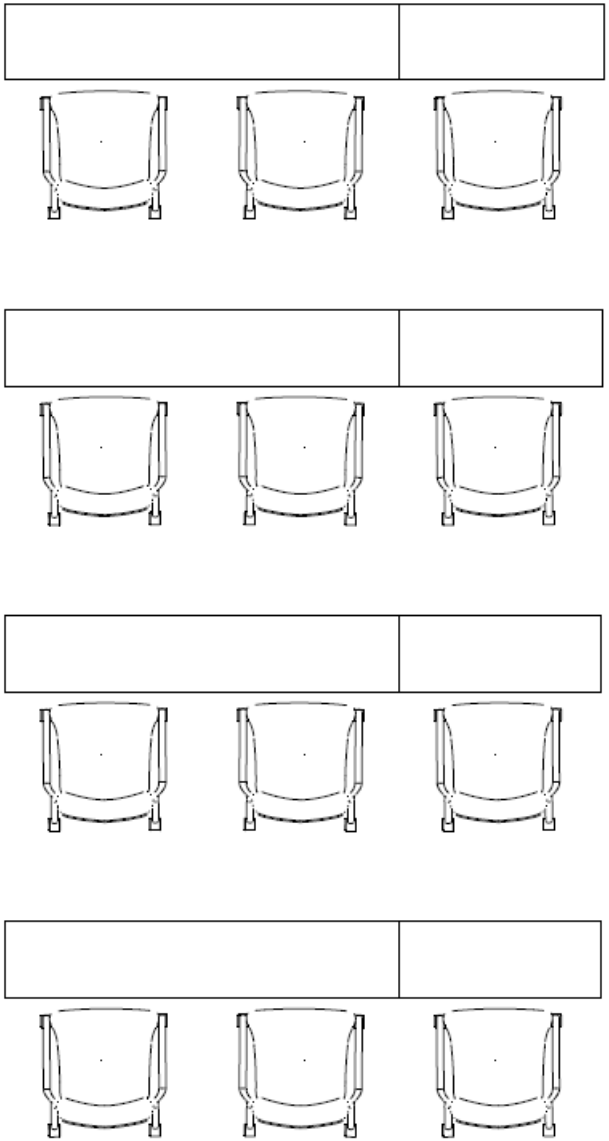
113