TYPE II–MARION

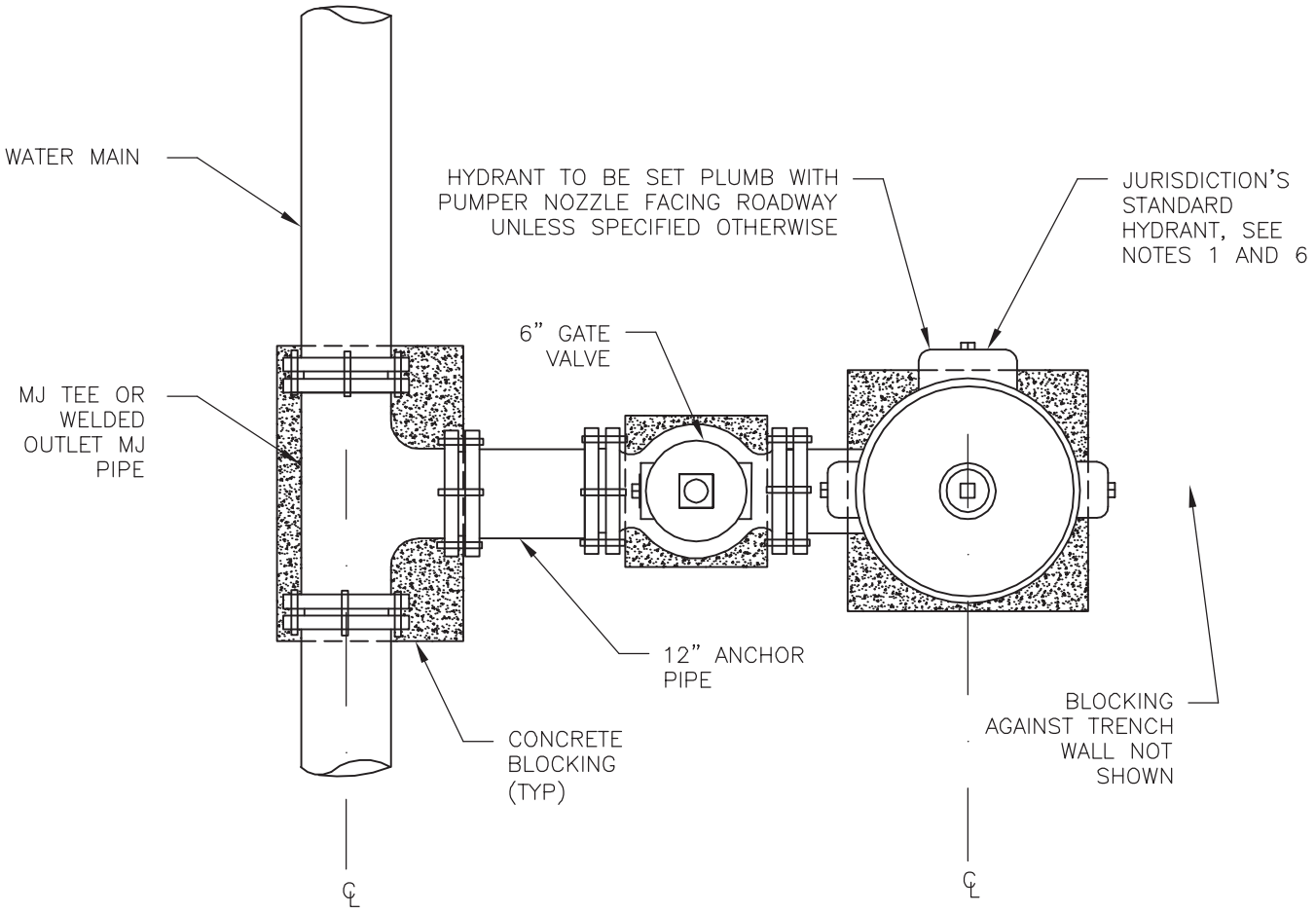

NOTES:

1. PROVIDE MINIMUM OF 4 CU. FT OF 1" TO 2" ROCK OR GRAVEL DRAIN MATERIAL.
2. COVER HYDRANT BARREL, ALL FIXTURES AND CONCRETE BLOCKING WITH POLYETHYLENE SHEETING. LEAVE OPENING FOR DRAINAGE AT BASE OF HYDRANT BARREL.
3. CONCRETE BLOCKING SHALL BE PER STANDARD DETAIL 2500–023.
4. REFER TO STANDARD DETAIL 2500–042 FOR ADDITIONAL INFORMATION
5. SET HYDRANT SO GROUND FLANGE IS 2" TO 6" ABOVE FINISHED GRADE
6. TYPE II–MARION HYDRANT SET APPLIES FOR THE CITY OF MARION AND CITY OF HIAWATHA.

FILE NO.: 2500–040	CEDAR RAPIDS METROPOLITAN AREA STANDARD DETAILS FOR PUBLIC IMPROVEMENTS	
APPROVAL DATE: JULY 2010		
REVISION NO.: 1	HYDRANT SET DETAIL TYPES II, II–TS, & II–MARION PERPENDICULAR TO WATER MAIN – SHEET 3 OF 3	NO. 2500–040
REVISION DATE: JULY 2010		